MSKTD
& Associates, Inc.
ARCHITECTURE ENGINEERING INTERIOR DESIGN
1715 MAGNAVOX WAY, FORT WAYNE, INDIANA 46804
PH. 260-432-9337

ADDENDUM NO. D-2

INDIANA UNIVERSITY SOUTHEAST SIDE RESIDENCE HALL
BLOOMINGTON, INDIANA
IU Project No. 20106837
MSKTD Project No. 5804
February 1, 2012

This addendum is issued as a supplement to the plans and specifications and shall be considered an integral part of the same.

ITEM	LOCATION	DESCRIPTION
D2.001	General Clarification	The description of Substantial Completion is now defined by a new section in the new AIA A201 (2007) General Conditions of the Contract Section 8.4.
D2.002	Specifications Section 004113	See the attached, updated Bid Form. The following Alternates have been added: Mechanical Alternate Bid No. M3d: Rittling. Mechanical Alternate Bid No. M4d: Rittling. Mechanical Alternate Bid No. M7: Resident Ventilation Supply Ductwork Smoke Dampers Electrical Alternate Bid No. E8: Duct-Mounted Smoke Detectors
D2.003	Specifications Section 004113	As a clarification, revise wording on alternates as follows: M3a: Change "Enviro-Tec" to "Enviro-Tec (Johnson Controls)" M3b: Change "Int'l Environ" to "Int'l Environ (IEC)" M3c: Change "Eng. Comfort" to "Eng. Comfort (Nailor)"

D2.004	Specifications Section 012300	Add the following Alternates: Alternate No. M3d: High Rise Fan Coil Units Alternate No. M3d Description: Rittling Alternate No. M4d: PSC Motors in lieu of ECM Motors Alternate No. M4d Description: Rittling. Alternate No. M7: Resident Ventilation Supply Ductwork Smoke Dampers Alternate M7 Description: State the cost to modify residence area ventilation supply ductwork (separating horizontal supplies to student rooms from common, corridor areas) and provide smoke dampers for the horizontal ductwork penetrations of the duct shafts. See Attachment D2.091. Change the fire dampers for the Vertical FCU Ductwork, Unit B, floors 2, 3 and 4 (reference Detail #1 on M2.3bc) to smoke/fire dampers. Alternate No. E8: Duct-Mounted Smoke Detectors Alternate E8 Description: (Reference Alternate Bid No. M7) State the cost to provide duct-mounted smoke detectors for mechanical smoke dampers that were added to horizontal ductwork penetrations of the duct shafts. See Attachment D2.091 for locations. Connect smoke detectors to fire alarm panel and provide dry contact with smoke detectors that will close upon detection to control the smoke damper. (Control voltage by M.C.)
D2.005	Specifications Section 012300	Alternate A1 Clarification: If Alternate A1 is accepted, the ceramic wall tile behind these lockers is to be deleted from the project. We want these lockers to be permanently secure to the wall.
D2.006	Specifications Section 015639	2.1 MATERIALS A. Chain-Link Fence, MODIFY as follows: ...a minimum of **72 inches (1,200 mm)** high;... ADD paragraph D as follows: D. PVC Fence: 'Safety orange' PVC fence fabric; a minimum of 48 inches (800 mm) high; with 6'-0" minimum galvanized T-posts and tie wires. 3.1 PREPARATION ADD paragraph G as follows: G. Temporary Fencing within Protected Root Zones: When construction activities are **unavoidable** within the root zones of protected trees as indicated in the Drawings, the Contractor shall install temporary PVC fencing surrounding the area required to execute the work within the Protected Root Zone. PVC fencing shall be removed as soon as the required work is complete.
D2.007	Specifications Section 042000	1.2, B, 2: This referenced section does not exist...see Section 034500.

D2.008	Specifications Section 044300	2.1 STONE SCHEDULE ADD paragraph D as follows: D. Limestone Roughback Blocks: As indicated in the Drawings and as provided by: 1. Rock Farm, LLC (317) 750-7384.
D2.009	Specifications Section 044313.13	2.2, B, 2, c: The field of limestone defined by "Type 2" in this part shall be modified to also accept 11 5/8 inch high units in addition to those listed. This is intended to provide maximum flexibility and efficiency in the fabrication of the units. The final overall pattern of the Type 2 veneer is subject to approval by the Owner and Architect. Part 2.4: General clarification regarding veneer anchorage of the ashlar and cut limestone veneer that is not stone trim: The veneer should be attached using normal veneer anchors as specified in this part. The general practice is to also secure a reasonable number of veneer pieces back to the wall using tabs or dowels in addition to the ties in the mortar bed. Use guidelines and practices as generally directed by the Indiana Limestone Institute's Handbook 22nd edition.
D2.010	Specifications Section 051200	All steel stud framing that is supporting structural loads shall be designed and submitted per this section. Specific questions regarding final spacing, gage and bracing of all stud framing will be the responsibility of the engineer meeting the performance indicated in this section and on the submittals as part of this section.
D2.011	Specifications Section 072713	Part 2.3, A, 1: Include Polyguard Products, Inc. "Polyguard 400 Membrane" as an acceptable manufacturer of the Modified Bituminous Sheet Air Barrier.
D2.012	Specifications Section 074213.19	Part 2.2, B, 1: To further clarify this section, Firestone Una-Foam Insulated Wall Panels is an approved manufacturer of insulated metal wall panels. Part 2.2, B, 4: The panel wall thickness must be 4 inches now that the metal stud back up has been eliminated. The panels must run vertically and withstand the wind loading, attachment configurations and bending criteria identified on the drawings. If additional midspan reinforcing is needed or vertical stud reinforcing, it will be the responsibility of this subcontractor to provide that requirement without hardship on the mechanical systems within the mechanical penthouse.
D2.013	Specifications Section 079200	Change 2.2, A, d: Pecora Corp. product should read 890 NST in lieu of 301 NS. Change 2.2, C, f: Add Pecora Corp. product 898 as an equal to the Mildew Resistant Silicone. Change 2.3, A: Modify the class description of the Urethane Joint Sealant to Class 25/25 in lieu of 100/50. Also add Pecora Corp. Dynatrol #1 as an approved equal. Change 2.5, A, 1: Add Pecora Corp AIS 919 as an approved equal.

D2.014	Specifications Section 081416	2.3, A, 3: Change the veneer cut to read Quarter Sliced not Plain Sliced as indicated.
D2.015	Specifications Section 085413	2.1, A: To further clarify this section, Armaclad Windows and Doors LLC Series 1002/1003 Commercial Slider Windows are an approved manufacturer of the Fiberglass Window based on the assumption that all design and performance criteria listed in the specifications are met.
D2.016	Specifications Section 087100	The following changes need to be made to the hardware specifications: Set 032 — Door B199E does not exist; therefore, no hardware is required. Set 035 — Door B111 in this set should be identified for Door B123G on the plans. Set 036 — Door B183A in this set should be identified for Door B123F on the plans. Set 045 — Door B123C in this set should be identified for Door B123E on the plans.
D2.017	Specifications Section 088000	1.4, B, 1: For modifications to the design wind loading for this project, refer to the new Addendum Number D2.074 for clarifications.
D2.018	Specifications Section 092900	The gypsum board contractor or the painting contractor responsible for the installation of the textured ceiling finish on the bottom side of the structural precast floor plank or drywall (on Fourth Floor) shall prep all voids and caulk all joints for a natural clean appearance. Final acceptance of the joint and voids shall be approved by the Owner and the Architect during mock up review.
D2.019	Specifications Section 095113	Part 2.2A: The use of Norton Industries Linear Wood Ceiling is an approved manufacturer for the ACT-2 type wood ceiling. This product must meet or exceed the specifications for the basis of design.
D2.020	Specifications Section 096723	Part 1.2.B Action Submittals – Verbiage clarification: Remove Green Globe and add in LEED.
D2.021	Specifications Section 096723	Part 2.1: Dur-A-Flex, Inc. is an approved manufacturer for the "RES1" resinous flooring material. The ELAST-O-COAT primer (25mils = 65sf/gal.), DUR-A-CHIP double broadcast (64mils) and final DUR-A-FLEX ARMOR top aliphatic UV stable Urethane System is approved as equal to basis of design. DynaDeco Zero Mercury System by Dynamic Sports Construction Inc. is an approved manufacturer for the "RES1" resinous flooring material. This product must meet or exceed the basis of design.
D2.022	Specifications Section 101105	Part 2, A, 1, a: Include Newline Products, Inc. as an acceptable manufacturer of the visual display boards for the porcelain enamel marker boards.

D2.023	Specifications Section 104000	Part 2.2, A, 1. Clarification on the definition of the polymide resin: The material used for the signage should be a thermoplastic resin product designed to withstand abuse, both physical and environmental.
D2.024	Specifications Section 104000	Interior Signage Schedule - Revise the schedule as follows: A588, A599, B588, B599 text should read the specific room number such as "A588"; use sign type A. One sign required at each door. B085, B107B, B006A, B190BA text should read the specific room number such as "B085"; use sign type A. B106, provide type F occupancy sign. Provide a type G sign at all stairwell landings, one sign for each level. B113, provide type F occupancy sign. B121 text should read " Residence Manager"; use sign type B. B190A; use sign type C4. B190B; use sign type C2. B199B; use sign type B1. B199C, B199L, B199LE, B199M: delete this sign at each location.
D2.025	Specifications Section 122413	Part 2, B and E: Include Draper, Inc. as an acceptable manufacturer of the single and double roller manually operated shades.
D2.026	Specifications Section 129300	2.3 BASKETBALL GOALS ADD subparagraph 3 as follows: 3. Approved Equal: Performance Sports Systems Co., Noblesville, IN, Model GN60 Gooseneck Outdoor Basketball System, including Model 1301B-R001 fiberglass backboard and Model 240 double-rim goal and nylon net. Supplier: Lee Company (812) 235-8155.
D2.027	Specifications Sections 21, 22, & 23 Drawings Mechanical, Plumbing, and Sprinkler Sheets	Refer to the table on Attachment D2.027 for status of approval for product substitutions.
D2.028	Specifications Section 220523	2.2.A.1 and A.2 - Replace paragraph 2.2.A.2.h and i with the following: "h. Stem: Brass." "i. Ball: Chrome plated brass."

D2.029	Specifications Section 220523	4.2.3.2.g – Replace with the following: "Disc: Nickel-plated ductile iron or Aluminum –Bronze disc."
D2.030	Specifications Section 232213	2.7-1 – Delete requirement that support saddles need to withstand a seismic event.
D2.031	Specifications Section 235700	1.4.C - Delete Paragraph C " Registration: Fabricate and label shell and tube heat exchangers to comply with the Tubular Exchanger Manufacturers Associations Standards."
D2.032	Specifications Section 237313	2.1.A.3 – Delete "CES Group" as an approved manufacturer.
D2.033	Specifications Section 237313	2.2.F.1.b - • Inner Casing: Galvanized steel, 22 gauge. (Everywhere except the cooling coil and humidifier section) • Inner Casing: 304 stainless steel liner. (The cooling coil section) • The internal liner in the coil sections shall be suitable for washing with a pressure washer or steam cleaner without risk of wetting the insulation. The liner shall be installed over top of the panel flanges and each liner seam shall be sealed with a lap joint. The wall liner shall be installed over the top of a 1.5" water dam such that any water run-off from the liner will drip into the water tight base rather than into the wall panel.
D2.034	Specifications Section 237313	2.2.F.1.c - • Floor Plate: 1/8" Aluminum Tread-Plate Floor. The floor shall be flat, reinforced from below, with all seams continuously welded. The manufacturer shall provide a 1.5" perimeter collar around the entire unit and around each floor opening to ensure the unit is internally watertight. The entire base shall act as an auxiliary drain pan and hold up to 1.5" water. • Provide auxiliary drains in all coil sections. • Maximum base deflection shall be ¼" on 240" unsupported span.
D2.035	Specifications Section 237313	2.2.F.3.c&f – • Option: Closed-cell insulation of at least 2-pound density and R-9 thermal performance will also be acceptable. • Thermal Break Design: Required such that net overall casing R-Value, when considering thermal bridge, is equal to or better than R-9 as tested via ASTM C1363-05.
D2.036	Specifications Section 237313	2.2.G Fan Section – • Belt Guards: Belt Guards: Fabricate to OSHA/SMACNA requirements; 0.1046-inch- thick, 3/4-inch diamond-mesh wire screen welded to steel angle frame or equivalent; prime coated. • Plenum Fan Enclosure: Fan housing shall be provided with OSHA Type enclosure. • Plenum Fan Inlet Screens are to be provided

D2.037 Specifications Section 237313

2.2.I Hydronic Coils –

- #5: .035" minimum wall thickness.

D2.038 Specifications Section 237313

2.2.M Energy Recovery System –

- Key Points:
  - 3 Angstrom Molecular Sieve Wheel
  - Manufacturers: Semco & Thermotech

D2.039 Specifications Section 237313

2.2 – Add Paragraph "R" and subparagraphs follows:

R. FACTORY AND FIELD LEAKAGE AND DEFLECTION TEST

- The unit manufacturer shall include all expenses for two university representatives to witness the testing of the unit.
- Leakage Testing: The unit manufacturer shall factory and field pressure tests the air handling unit. The leakage rate of the casing shall not exceed 1.0% of the unit air flow at +/- 10" static pressure.
  - The test shall be conducted in accordance with SMACNA duct construction manual. A calibrated orifice shall be used to measure leakage airflow.
  - An officer of the manufacturing company shall certify test results and forward copies of the certified test results to the engineer and owner.
  - Positive pressure plenums shall be tested positively and negative pressure plenums shall be tested negatively.
  - Units must be tested in a fully assembled state equal to that of operational equipment with unit sections mated and attached per Installation and Operation Manual instructions. AHU may not have temporary modifications, caulking, lubricant, tape, or other item designed to help it pass the test. Air handler doors will be closed using the factory locking mechanism normally supplied with the door, no additional blocking or modifications are allowed. Testing individual sections are NOT acceptable.
  - Temporary panels may be used to secure all duct, damper and similar openings in the air handler (ONLY)
- Deflection Testing: The unit manufacturer shall provide factory deflection test for the air handling unit. The deflection shall be less than L/200 at +/- 10" static pressure.
  - The test shall be conducted in accordance with SMACNA duct construction manual. A calibrated orifice shall be used to measure pressure.
  - An officer of the manufacturing company shall certify test results and forward copies of the certified test results to the engineer and owner.
  - Positive pressure plenums shall be tested positively and negative pressure plenums shall be tested negatively.
  - A dimensioned cross section of the units being tested showing the test locations must be provided to the University representative prior to test being performed.
  - Deflection shall be measured using a dial indicator.
  - For each the test, either positive or negative, all points will be tested simultaneously. This typically involves at least three and no more than six points, one on the largest panel in

each wall and the roof, one on a panel in the end wall, and two other points determined at the time of the test. The test point is typically at the midpoint of the cabinet height and midpoint of the width but at no point will the unit deflect more than specified. If, during testing, the witnessing University or Engineer representative observes excessive deflection in a panel other than that being tested the test will be repeated and the suspect panel tested in addition to any panel that failed the initial test. Panels that passed the initial test do not need to be retested.

- Maximum allowable floor deflection is L/400 of the width of the floor being tested. Floor test with a 300 lb load on one square foot at the center of the floor.

D2.040	Specifications Section 237313	3.4 Connections – • Division 23 contractor is responsible for ALL interconnecting wiring across the shipping splits for the air handling units.
D2.041	Specifications Section 238219	1.6.A.1 - Revise to read as follows: " Spare High Rise Fan-Coils: Furnish one (1) spare high-rise fan coil for each size (Size 03, 04, and 06) provided on the project (3 units total).
D2.042	Specifications Section 238219	2.1.A – Delete "Engineered Air" as an approved manufacturer.
D2.043	Specifications Section 238219	2.2.A. B - Replace the first sentence with the following: "Cabinet Insulation: The entire unit shall be insulated with ½" thick elastomeric foam insulation."
D2.044	Specifications Section 238219	2.2.D.1 – Replace with the following: "All cabinets shall be of the type shown on the drawings and shall be manufactured from 14 gauge, galvanized steel."
D2.045	Specifications Section 238219	4.2.2.D.1 – Replace….."quarter turn screws" with ….."tamper resistance screws"
D2.046	Specifications Section 266700	2.1.A – Add Robbins Lightning Protection.
D2.047	Specifications Section 270000	Coaxial cabling: See Attachment D2.047 for picture showing the wall-mounted solution for terminating coaxial drops.

D2.048 Specifications Section 321123

2.1 MATERIALS

ADD subparagraph B as follows:

B. Geotextile Separation Fabric: Acceptable materials are subject to compliance with the specified requirements. Acceptable manufacturers offering geotextiles that may be incorporated in the work include, but are not limited to, the following:

1. Mirafi
2. SI Geosolutions
3. Amoco Fabrics
4. Contech Construction Products

D2.049 Specifications Section 321313

1.2 RELATED SECTIONS

DELETE paragraph C.

1.4 SUBMITTALS

DELETE the word "Matrix" from paragraph E.

2.4 ACCESORIES

ADD paragraph E as follows:

E. Polyethylene Film: ASTM D 497, 1 mil thick, clear.

ADD paragraph F as follows:

F. Chemical Surface Retarder: Water-soluble, liquid set retarder without color dye, for horizontal concrete surface application, capable of temporarily delaying final hardening of concrete to a depth of 1/8 to 1/4 inch (3 to 6 mm).
   1. Products: Subject to compliance with requirements, provide one of the following:
      a. True Etch Surface Retarder; Burke Group, LLC
      b. Concrete Surface Retarders; Euclid Chemical Co.
      c. Expose; Kaufman Products, Inc.
      d. Lithotex; L.M. Scofield Co.
      e. Rugasol-S; Sika Corporation

3.7 FINISHING

ADD paragraph F as follows:

F. Monolithic Sand-Release Finish: Expose sand aggregate to all integrally colored pavement surfaces as follows and in accordance with procedures developed during the mock-up:
   1. Immediately after floating, spray-apply chemical surface retarder to pavement according to manufacturer's written instructions.
   2. Cover with plastic sheeting, sealing laps with tape, and remove when ready to continue finishing operations.
   3. When concrete has taken its initial set, and after the finishing operations are completed, direct a fin spray of water at an approximate angle of fifteen degrees to the surface of the concrete.
   4. Wash the laitance and retarder from the surface without both disturbing the small aggregate and causing sand runs to appear.
   5. Remove laitance, retarder residue, and dirty wash water from finished surfaces as soon as washing operations are complete.

6. Apply a dilute solution acid wash as required to kill the efflorescence. Later applications may be stronger.
7. Design consolidation and finishing methods to avoid uneven settlement of aggregate above reinforcing bar locations. Uneven settlement results in uneven surface when combined with retarder application.

D2.050 Specifications Section 321413

2.1 SOLID CONCRETE UNIT PAVERS

ADD paragraph D as follows:

D. Detectable Warning Paver: Wausau Tile, Wausau, WI, (800) 388-8728
   1. Product: ADA-2 Paver
   2. Sizes: 12" x 12" x 2 ¾" thick
   3. Paver Color: ADA-30
   4. Joint Filler: Sand, 100% passing #16 sieve (ASTM D994)

D2.051 Specifications Section 329200

2.3 SOD

REPLACE paragraph A with the following:

A. Provide freshly harvested State-certified sod from a single source as follows:
   1. Rhizomatous Tall Fescue (RTF) turf-type tall fescue sod as provided by:
      a. Ameri-Turf, Anderson, IN, (800) 954-5577.
      b. GrassMasters, Patoka, IN, (888) 763-3276.

D2.052 Drawings C0.2 & C0.3 and Specification Section 312000

See the attached Drawings C0.2 and C0.3. These two drawings are new drawings to the set. They are to be included as part of the Base Bid. The intent of these drawings is to assist the General Contractor on interpretation of soils and rock to be removed as part of the Base Bid construction in the project. Our intent is to assist and identify the approximate location of rock that will be encountered as part of the project but not to quantify the exact amounts that will be required to be removed nor define means and methods. All rock or soil necessary for the construction of all foundations, footings, slabs, granular subgrade, trenches, piping, pipe bedding, landscape walls and associated foundations, and all new construction MUST be removed as part of Base Bid excavation and earthwork removal. The Architect, Engineer, nor Owner will accept any additional costs for removal of any rock or soil encountered in order to construct any of the designed new construction. Therefore, ALL material must be removed down to the neat line or construction line for the new construction. We also EXPECT that all material necessary to construct and maintain legal and necessary construction practices should also be included in the Base Bid construction. The ONLY allowable unit cost that will be considered for review by the Owner, Structural Engineer, and Testing Agencies are those soils which are BELOW sub-grade bearing established by the design of the new work. All of that work must be approved prior to removal. Approval shall be established by majority agreement from the following three groups: Indiana University (or their own independent testing agency), MSKTD & Associates, and the General Contractor's licensed testing agency.

D2.053	Drawings C3.4	The Telecom Ductbank on the southeast side of the building is shown to the wrong "PH" manhole - the correct "PH" manhole is shown just north and slightly west of the location shown.
D2.054	Drawings C3.4	Site Fixture Schedule – S01 – Add Sternberg. S02 – Add Sternberg. S03 – Add Sternberg. S04 – Change description to read 24" OAH custom bollard. Add AllScape; Hydrel. S05 – Add Hubbell; Lithonia. S06 – Add Hubbell.
D2.055	Drawings C4.0	REVISE STR. ST-10 plan note to read, "6 LF OF TRENCH DRAIN AND 23 LF OF 6" PVC (SEE DETAIL 12/C8.0.")
D2.056	Drawings C4.0	REVISE STR. ST-11 plan note to read, "6 LF OF TRENCH DRAIN AND 18 LF OF 6" PVC (SEE DETAIL 12/C8.0.")
D2.057	Drawings C4.0	REVISE casting designation to read, "NEENAH R-3405," on two existing structures indicated on attached Drawing D2.C4-sk1 (Attachment D2.057).
D2.058	Drawings C4.1	Notes under heading "WORK BY DIVISION 21,22,23" Revise Note 1 to read as follows: "Extend steam and condensate line from mechanical room and connect to existing steam and condensate lines stubbed off outside the building between the sidewalk (to the south) and the south side of the building."
D2.059	Drawings C8.0	REVISE Detail 1/C8.0 as indicated on attached Drawing D2.C8-sk2 (Attachment D2.059).
D2.060	Drawings C8.0	REVISE Detail 3/C8.0 as indicated on attached Drawing D2.C8-sk3 (Attachment D2.060).
D2.061	Drawings C8.0	REVISE Detail 6/C8.0 as indicated on attached Drawing D2.C8-sk4 (Attachment D2.061).
D2.062	Drawings C8.0	REVISE Detail 10/C8.0 as indicated on attached Drawing D2.C8-sk5 (Attachment D2.062).
D2.063	Drawings C8.0	REVISE Detail 11/C8.0 as indicated on attached Drawing D2.C8-sk6 (Attachment D2.063).
D2.064	Drawings C8.0	REVISE Detail 12/C8.0 as indicated on attached Drawing D2.C8-sk7 (Attachment D2.064).

D2.065	Drawings C8.0	REVISE Detail 9/C8.0 as indicated on attached Drawing D2.C8-sk8 (Attachment D2.065).
D2.066	Drawings L1.0	DELETE "per University direction" from the Tree Preservation Legend.
D2.067	Drawings L2.0	MODIFY the KEY PLAN as indicated in the attached Drawings D2-067a (L2.) and D2-067b (L2.0). ADD MATERIAL KEY NOTE P1.7 as follows: P1.7 Asphalt Paving with Court Surfacing, Refer to Detail 4/L6.0. REPLACE MATERIAL KEY NOTE P3.1 with the following: P3.1 Ramp with Handrails and Integrally Colored Concrete Pavement with Sand Release Finish, Refer to Detail 3/L6.4.
D2.068	Drawings L3.0	ADD the following note to the PLANTING PLAN: Note: Transplanting of ten (10) trees as indicated shall be included in the Base Bid.
D2.069	Drawings L4.0	MODIFY the ALTERNATE BID: ENLARGED LAYOUT PLAN as indicated in the attached Drawings D2-069a & D2-069b (L4.0).
D2.070	Drawings 12/L6.0	ADD the following note to the Steel Edge detail: Note: Steel Edging shall be 3/16" thickness, 4" height, in 16' lengths with 6 – 3/16"x15" stakes per section, minimum. Edging and stake finish shall be black enamel paint. Basis of Design: 'Border Guard' by Border Concepts, Inc., Charlotte, NC, (704) 541-5509.
D2.071	Drawings 15/L6.0	DELETE the NOTE at the top of the Mow Strip detail.
D2.072	Drawings 6/L6.2	REPLACE Detail 6 with the attached Drawing D2.072 (L6.2).
D2.073	Drawings 10/L6.2	REPLACE Detail 10 with the attached Drawing D2.073 (L6.2).
D2.074	Drawings S1.1	Under General Notes, Design Live Loads, Wind, Basic Wind Speed is specified at 115 MPH. ASCE 7-2010 factors and procedures shall be used to determine wind pressures using 115 MPH basic wind speed. As an alternative, ASCE 7-2005 may be used with its associated factors and procedures to determine wind pressures using 90 MPH basic wind speed. Both standards are acceptable to determine the design wind pressures. The importance factor for both standards shall be 1.0.

D2.075	Drawings S1.1	Add the following note for construction clarification to "Hollow Precast Planks:" Some limited cutting of the beam flanges will be allowed to gain access for placement of the planks. However; in most cases, one end of the beam is open to allow sliding of the planks into final position. Cutting the beam flanges will be allowed only as a last resort and will only be allowed as such. The installing contractor must provide additional steel to restore the original beam flange to its design section.
D2.076	Drawings A0.5	Added Wall Types 1.4A & 1.4B. See Attachment D2.076.
D2.077	Drawings A0.6	Delete the 6" metal studs shown in Partition Type 1.8A. The metal panels specified are to clear span between floor and roof steel, no additional back up is required.
D2.078	Drawings A4.3	Penthouse Elevations 3 and 4 on A4.3. Add detail cut 13/A6.7 to louver head in both elevations.
D2.079	Drawings A6.5	Revise detail 6/A6.5 Head Detail. See Attachment D2.079.
D2.080	Drawings A6.5 Addendum D1.121	Addendum D-1, Item D1.121 - The Sill Detail revised in Addendum D-1 is detail 7/A6.5, not 9/A6.5 as stated in Addendum D-1. There is no detail 9 on sheet A6.5.
D2.081	Drawings A6.5	Detail cut 7/A6.5 shown in Jamb Detail 5/A6.5 applies to the wall alcove west of door B199V as shown , and the alcove north of door B199VA.
D2.082	Drawings A6.7	Add Penthouse Louver Detail number 13 to this sheet. See Attachment D2.082.
D2.083	Drawings A7.2	Details 1 and 2 on this sheet make reference to acoustical block. These block should read as normal weight concrete block.
D2.084	Drawings A9.2b	Rooms B105, B107, B107A, and B107B should identify the ceiling type as ACT4 and not ACT1 as shown.
D2.085	Drawings A10.2	Detail #1 should indicate grab bars #8, 9, and 10 as part of each shower. Refer to Toilet Accessory Schedule on Drawing A10.5.
D2.086	Drawings A10.4	Detail #1 should provide blocking for FUTURE grab bars #8, 9, and 10. Refer to Toilet Accessory Schedule on Drawing A10.5. Detail #21 should indicate grab bars #8, 9, and 10 as part of each shower. Refer to Toilet Accessory Schedule on Drawing A10.5.

D2.087	Drawings A10.5	Detail #14 does not require any grab bars in this shower. Detail #15 should provide blocking for FUTURE grab bars #8, 9, and 10. Refer to Toilet Accessory Schedule on this sheet.
D2.088	Drawings A10.6	Detail #12 should indicate grab bars #8, 9, and 10 as part of each shower. Refer to Toilet Accessory Schedule on Drawing A10.5.
D2.089	Drawings A12.3a-d	The drywall ceilings on the Fourth Floor shall be sprayed with the same finish coat and painted in the same manner as the concrete plank system on the lower floors. The drywall must be finished and acceptable to the painter/finisher per the specifications and per the addendums.
D2.090	Drawings A12.3d	The schedules on this sheet are also representative of the third and fourth floors of this building and should be labeled as Room Finish Schedule Second, Third and Fourth Floors Unit A, B, and C. Therefore, it should be understood that there are also the same rooms on Third and Fourth floors and the contractor should include all of these rooms and these floors in the Base Bid.
D2.091	Drawings M2.1a through M2.5bc	Changes to Residence Floors ventilation supply ductwork, ALTERNATE BID M-7 only. See Attachment D2.091.
D2.092	Drawings M2.1bc	Modify LAUNDRY EXHAUST B006 ductwork per Attachment D2.092.
D2.093	Drawings M2.2bc	- Change the two (2) supply diffusers SD-2 connected to VAV-B199LE in ENTRY LOBBY EAST B199LE from square plaque to linear slot SL-5. - Change the one (1) return grille RG-7 in ENTRY LOBBY EAST B199LE and the one (1) RG-7 in CORRIDOR B199D from square eggcrate to linear return RL-1. - Add one (1) linear slot diffuser SL-6 to the cabinet heater CUH-B199L located in ENTRY LOBBY EAST B199LE near the courtyard door. Connect to cabinet heater with ductwork transitioning from heater discharge to 10" SL-5 inlet, approximately 15' of 10" duct. Cabinet heater returns from plenum.
D2.094	Drawings M2.3bc	Change note with Detail #1 Vertical FCU Ductwork from SMOKE DAMPER REQUIRED FOR TRANSFER AIR DUCT AND SUPPLY DUCT PENETRATIONS OF THIS ROOM to FIRE DAMPER REQUIRED FOR TRANSFER AIR DUCT AND SUPPLY DUCT PENETRATIONS OF THIS ROOM, BASE BID ONLY. ALTERNATE BID M-7 REQUIRES SMOKE/FIRE DAMPERS FOR THESE PENETRATIONS. TYPICAL FOR FLOORS 2, 3 AND 4.

D2.095	Drawings M4.3	ENLARGED MECHANICAL ROOM B089 PLAN - a. Change the pressure reducing vent size to 8" and terminate inside the areaway (at northeast corner of room.) b. Route the condensate pump vent over to inside the areaway and terminate.
D2.096	Drawings M4.4	Add to Mechanical Note #3: PROVIDE HORIZONTAL, TYPE B FIRE DAMPERS FOR VENTILATION AND EXHAUST AIR DUCTWORK PENETRATIONS.
D2.097	Drawings M5.1	HYDRONIC SUPPLY PUMP SCHEDULE – CWP-1 and CWP-2 shall be a Model 3G, 164 ft. hd. , 30 hp. in lieu of that stated in schedule. HWP-3,4,5,6,7 shall be a Model 60 1x1x5 ¼ in lieu of that scheduled.
D2.098	Drawings M5.1	MISC. EQUIPMENT SCHEDULE – Change air separator AS-1 from R-4 to RL-4.
D2.099	Drawings M5.2	Remove from MISC EQUIPMENT SCHEDULE: LF-1 and LF-2 (Lint Filters). Add to MISC EQUIPMENT SCHEDULE: SD-2 Smoke/Fire Damper; Air Balance Model, (Alternate Bid M-7 only).
D2.100	Drawings M5.4	Add to VERTICAL HI-RISE FAN COIL UNIT SCHEDULE – UNIT B FIRST FLOOR: FCU-B123 & FCU-B125 LH (Left-Hand) Coil Connections. Add to VERTICAL HI-RISE FAN COIL UNIT SCHEDULE – UNIT B SECOND FLOOR: FCU-B206 LH (Left Hand) Coil Connections. Add to VERTICAL HI-RISE FAN COIL UNIT SCHEDULE – UNIT B THIRD FLOOR: FCU-B306 LH (Left-Hand) Coil Connections. Add to VERTICAL HI-RISE FAN COIL UNIT SCHEDULE – UNIT B FOURTH FLOOR: FCU-B406 LH (Left-Hand) Coil Connections.
D2.101	Drawings M6.2	"Pressure Reducing Station Detail" - Note the following: 1. The 2/3 valve shall be sized for 5029 lbs/hr, 94.6 Dba downstream of valve. 35 Dba reduction silencer 2. The 1/3 valve shall be sized for 2,745 lbs/hr, 90.5 Dba downstream of valve. 35 Dba reduction silencer.
D2.102	Drawings M6.3	Delete Lint Collector detail.
D2.103	Drawings P2.2c	Apartment Kitchens B123C and B125C - Change S-1 to S-5.

D2.104	Drawings P4.1	ENLARGED MECHANICAL ROOM PLUMBING PLAN Show the Solar Air Separator just upstream of the tank SDDT-1.
D2.105	Drawings P5.1	S-5 shall be same sink and faucet as S-1, but add disposer In-Sink-Erator "Pro ES" 3/4 HP, stainless steel grinding components and chamber, 115/60/1, one-piece stainless steel stopper. P.C. shall tie dishwasher to hot water line and drain to disposer.
D2.106	Drawings P5.1	SOLAR SYSTEM, SCCP-1 SOLAR COLLECTOR CIRCULATION PUMP Note the following: Pump is a 1510 series and shall be bronze fitted in lieu of all bronze.
D2.107	General Electrical Item	All exterior devices (fixtures, strobes, etc.) shall be weatherproof and UL listed for wet location.
D2.108	Drawings E5.2	Electrical Security Riser Diagram: E.C. shall be responsible for all work shown on this sheet unless specifically stated otherwise. Coordinate all work with CBORD and Door Hardware Supplier. 1/2" conduit may be stubbed above ceiling and wiring (plenum rated) installed to control panels.
D2.109	Drawings E5.3	Fire Alarm Riser – Two conductor shielded cables should be used for the speaker circuits. Follow manufacturer's requirements.
D2.110	Drawings E7.1	Detail 1 - Change wire size for CWP-1 and CWP-2 to 3#4AWG, #8GND. Change breaker size feeding pumps to 80A/3P.
D2.111	Drawings E9.4	Electric Ductbank : Replace "Reinforced Concrete" with "3000 PSI concrete 3" min. envelope around duct. (4) #6 dwls. 2'-0" long at construction joints (one each corner). "
D2.112	Drawings E9.4	Lighting Control Diagram: Master LCP1: Lutron XPS24-FT with timeclock and photocell interface. Panels LCP2 thru LCP9: XPS24-FT wiring Lutron GRX-PCBL-48L plenum. Acceptable manufacturers: Leviton, Crestron.

D2.113	Drawings E9.4	Fixture Schedule: Add the following manufacturers to list of acceptable manufacturers:

F02 – H.E. Williams
F04 – H.E. Williams
F05 – H.E. Williams
F06 – H.E. Williams
F08 – Columbia; LiteControl; Axis
F09 – Columbia ; H.E. Williams
F10 – Columbia; H.E. Williams
F11 – Texas Fluorescent
F12 – Lumax
F13 – Prescolite; Gothom
F14 – Texas Fluorescent; H.E. Williams
F15 – Lutron
F16 – Linier Lighting; Columbia; Lithonia; Prudential; H.E. Williams
F17 – Texas Fluorescent; H.E. Williams
F18 – H.E. Williams
L01 – Prescolite
L02 – Prescolite
L03 – Visa; DeltaLight
L04 – Visa; DeltaLight
L05 – RAL
L06 – OCL; McFadden
L07 – OCL; McFadden
L08 – DECO
L09 – Iluminarc; Lumen Pulse

Respectfully submitted,

MSKTD & ASSOCIATES, INC.

GARY EDWARD VOIROL
REGISTERED
No.
900022
STATE OF
INDIANA
ARCHITECT

Gary E. Voirol, Architect

Attachments: Section 004113, Bid Form (Revised Addendum D-2)
D2.027 (Sections 21, 22, 23 and Mechanical, Plumbing, Sprinkler sheets)
D2.047 (270000)
C0.2
C0.3
D2.057 (D2.C4-sk1)
D2.059 (D2.C8-sk2)
D2.060 (D2.C8-sk3)
D2.061 (D2.C8-sk4)
D2.062 (D2.C8-sk5)
D2.063 (D2.C8-sk6)
D2.064 (D2.C8-sk7)
D2.065 (D2.C8-sk8)
D2.067a (L2.0) & D2.067b (L2.0)
D2.069a (L4.0) & D2.069b (L4.0)
D2.072 (6/L6.2)

D2.073 (10/L6.2)
D2.076 (A0.5)
D2.079 (A6.5)
D2.082 (A6.7)
D2.091 (M2.3a Alternate)
D2.092 (M2.1bc)

cc: All plan holders
File 9.2

BID FORM
for

Southeast Side Residence Hall
Indiana University – Bloomington Campus
Bloomington, Indiana
IU 20106837

TO: The Trustees of Indiana University
Bloomington, Indiana

FROM:

Bidder's Name _____

Address _____

City and State _____

Phone Number _____ Date _____

FAX Number _____ FEIN _____

Indicate if your firm is a certified minority-owned business ____Yes _____ No
If "Yes", please attach a copy of certification

FOR: **Unified Bid** to include General, Mechanical, and Electrical Construction Work

Bidders:

LUMP SUM BASE BID

The undersigned Bidder, with a complete understanding of existing conditions at the Project Site and a complete understanding of the Bidding Documents, including any Addenda acknowledged hereinafter, for Southeast Side Residence Hall on the Indiana University Bloomington campus as prepared by MSKTD & Associates, Inc, hereby proposes to complete the project, in full and complete accordance with the requirements of the Bidding documents, for the LUMP SUM BASE BID PRICE of:

_____Dollars $_____
(written amount) (numerals)

ALTERNATE PROPOSALS

1. Alternate proposals are requested under Alternates of the Bidding Documents. (See Specification Index)
2. The alternate proposal shall indicate the amount to be added to or deducted from the Lump Sum Base Bid if the alternate proposal is accepted by the Owner.
3. The alternate proposal shall include all costs necessary for the complete installation of the materials or items indicated for the alternate proposal, including materials, labor, equipment, operations, administration, overhead, profit, and taxes (as applicable).
4. The alternate proposal shall also include all costs for changes in the work (including work of other Separate Contracts) that will be made necessary by acceptance of the alternate proposal.
5. The Bidder shall submit prices for all the alternates listed below in the manner indicated. Cross out (Add) or (Deduct) as applicable. If there is no change in price to the Lump Sum Base Bid, write in "No Change".

Landscape Alternate No. L1: Multipurpose Sport Court

(Add) (Deduct) _____ Dollars $_____
(written amount) (numerals)

Landscape Alternate No. L2: Bus Stop Shelter

(Add) (Deduct) _____ Dollars $_____
(written amount) (numerals)

Landscape Alternate No. L3: Freestanding Limestone Benches

(Add) (Deduct) _____ Dollars $_____
(written amount) (numerals)

Landscape Alternate No. L4: South Plaza Pavers

(Add) (Deduct) _____ Dollars $_____
(written amount) (numerals)

Landscape Alternate No. L5: Resident Plaza Pavers

(Add) (Deduct) _____ Dollars $_____
(written amount) (numerals)

Landscape Alternate No. L6: Planting

(Add) (Deduct) _____ Dollars $_____
(written amount) (numerals)

Architectural Alternate No. A1: Pod Restroom Lockers

(Add) (Deduct) _____ Dollars $_____
(written amount) (numerals)

Architectural Alternate No. A2: Glass Shower Doors

(Add) (Deduct) _____ Dollars $_____
(written amount) (numerals)

Interiors Alternate No. I1: First Floor Terrazzo Floor

(Add) (Deduct) _____ Dollars $_____
(written amount) (numerals)

Interiors Alternate No. I2: Solid Surface Window Sills

(Add) (Deduct) _____ Dollars $_____
(written amount) (numerals)

Interiors Alternate No. I3: Single Semi-Suite Floor Porcelain Tile

(Add) (Deduct) _____ Dollars $_____
(written amount) (numerals)

Interiors Alternate No. I4: Magnetic Glass Visual Display Boards

(Add) (Deduct) _____ Dollars $_____
(written amount) (numerals)

Mechanical Alternate No. M1: Solar Water Heating System

(Add) (Deduct) _____ Dollars $_____
(written amount) (numerals)

Mechanical Alternate No. M2: Custom Air Handlers

M2a: Hakon _____ Dollars $_____
(written amount) (numerals)

M2b: Air Enterprises _____ Dollars $_____
(written amount) (numerals)

M2c: Temtrol _____ Dollars $_____
(written amount) (numerals)

Mechanical Alternate No. M3: High Rise Fan Coil Units

M3a: Enviro-Tec (Johnson Controls)

_____ Dollars $_____
(written amount) (numerals)

M3b: Int'l Environ. (IEC)

_____ Dollars $_____
(written amount) (numerals)

M3c: Eng. Comfort (Nailor)

_____ Dollars $_____
(written amount) (numerals)

M3d: Rittling _____ Dollars $_____
(written amount) (numerals)

Mechanical Alternate No. M4: PSC Motors in Lieu of ECM Motors

M4a: (Johnson Controls) _____ Dollars $_____
(written amount) (numerals)

M4b: (IEC) _____ Dollars $_____
(written amount) (numerals)

M4c: (Nailor) _____ Dollars $_____
(written amount) (numerals)

M4d: (Rittling)_____ Dollars $_____
(written amount) (numerals)

Mechanical Alternate No. M5: Finned Tube Radiators

(Add) (Deduct) _____Dollars $_____
(written amount) (numerals)

Mechanical Alternate No. M6: Use of Thermostat Fan Coil Control vs. DDC Controller in Resident Rooms

(Add) (Deduct) _____Dollars $_____
(written amount) (numerals)

Mechanical Alternate No. M7: Resident Ventilation Supply Ductwork Smoke Dampers

(Add) (Deduct) _____Dollars $_____
(written amount) (numerals)

Electrical Alternate No. E1: Transformer Insulation

(Add) (Deduct) _____Dollars $_____
(written amount) (numerals)

Electrical Alternate No. E2: Aluminum Feeders

(Add) (Deduct) _____Dollars $_____
(written amount) (numerals)

Electrical Alternate No. E3: MC Cable Feed to Apartment Ranges

(Add) (Deduct) _____Dollars $_____
(written amount) (numerals)

Electrical Alternate No. E4: CATV Equipment

(Add) (Deduct) _____ Dollars $_____
(written amount) (numerals)

Electrical Alternate No. E5: J-Hooks for Low Voltage Wiring

(Add) (Deduct) _____ Dollars $_____
(written amount) (numerals)

Electrical Alternate No. E6: Student Room Panel Feeds

(Add) (Deduct) _____ Dollars $_____
(written amount) (numerals)

Electrical Alternate No. E7: Classroom B111 Floor Power/Data

(Add) (Deduct) _____ Dollars $_____
(written amount) (numerals)

Electrical Alternate No. E8: Duct-Mounted Smoke Detectors

(Add) (Deduct) _____ Dollars $_____
(written amount) (numerals)

UNIT PRICES

1. The following Unit Prices shall include all costs necessary for the complete installation of the materials or items indicated, including materials, labor, equipment, operations, administration, overhead, profit and taxes (if applicable).
2. These Unit Prices shall be used to determine the costs for changes in the work during the construction period, when agreed upon by the Owner.
3. The Bidder shall submit Unit Prices for the following, plus any other Unit Prices requested in the Bidding Documents, in the manner indicated.

	Item	Unit	Price - add / deduct
Civil:			
C1	Removal of unsatisfactory soil and replacement with satisfactory soil material	CY	$_____
C2	Rock excavation and replacement with satisfactory soil material	CY	$_____

Landscaping:

L1	Topsoil	CY	$_____
L2	Washed River Gravel	CY	$_____
L3	4” Standard Concrete Pavement	SF	$_____
L4	4” Integrally Colored Concrete with Sand Release Finish	SF	$_____
L5	5” Heavy Duty Concrete Pavement	SF	$_____
L6	4” Nominal Split-Faced Ashlar Limestone Veneer	SF	$_____
L7	Limestone Millblock Bench	Each	$_____
L8	Limestone Roughback Retaining Wall	LF	$_____

Interiors:

I1	Terrazzo and Accessories	SF	$_____
I2	½” Solid Surface Material	SF	$_____

TAX EXEMPTIONS

The undersigned Bidder has informed himself and all his prospective sub-contractors and suppliers of the tax exempt status of the Owner, as set forth in the Special conditions, and therefore, has not included these taxes in his Lump Sum Base Bid price.

LIQUIDATED DAMAGES

The Bidder has read Supplementary Special Conditions, Section 006030, and understands the Contract Document requirements for the project schedule and provisions for the liquidated damages as set forth in that section.

SUBSTITUTIONS

The undersigned Bidder has based his bid upon the materials, products, articles, equipment, brands, manufacturers and processes described in the Bidding Documents or upon approved equivalents. Proof of equivalency of substitutions is the responsibility of the Bidder, but the Architect/Engineer shall be the sole judge of equivalency. Proposed equivalent substitutions shall be equal in all respects to the requirements of the Bidding Documents, including but not limited to the design, quality, physical size, performance characteristics, strength, previous history of use, and to the method of installation, attachment, or connection to related or adjoining work. Determination of equivalency of proposed substitutions shall be by the Architect/ Engineer, before the bid opening date, as described in paragraph entitled “Substitutions" in the Instructions to Bidders.

COMPLETION DATE

The Undersigned Bidder agrees to coordinate and expedite his work with all contractors and that all work shall be substantially complete no later than July 1, 2013.

Refer to Specification Section 006030 for information on Liquidated Damages.

PERFORMANCE BOND

The undersigned Bidder agrees, if awarded the Contract, to deliver to the Owner a satisfactory Performance Bond, in the full amount (100%) of the total Contract price, not later than the date of execution of the contract. The cost of the Bond shall be included in the Lump Sum Base Bid contained in this Proposal.

SUPPLEMENTAL DOCUMENTS

Bid Security, State Form 96 (Revised 2005), Financial Statements, Written Drug Testing Program, which must be in full compliance with IC 4-13-18-6; Minority and Women's Business Enterprise Participation Plan, Pg. 1 and 2; Contractor Asbestos Certification: Statement of Wages to be Paid form; Appendix A turned in at bid time, and Appendix B - D turned in 48 hours later.

ADDENDA

The following Addenda have been received by the undersigned Bidder; and all costs resulting from these Addenda have been included in the preparation of this Bid Form:

Addendum No. _____ Dated _____

Addendum No. _____ Dated _____

Addendum No. _____ Dated _____

Addendum No. _____ Dated _____

Addendum No. _____ Dated _____

SIGNATURES

1. **When a Bidder is an Individual**:

_____ _____
Witness Bidder

Date: _____ Address:_____
_____

2. **When a Bidder is a Partnership**: _____
Name of Partnership

Date: _____ Address: _____
_____

_____ _____
Partner Partner

3. When Bidder is a Corporation:_____
Name of Corporation

Date: _____ Address: _____
_____

By: _____
President

Attest: _____
Secretary

CORPORATE SEAL

END

SUBMITTAL SCHEDULE OF APPENDICES

A. All Bidders shall submit **with their Bid** the following Appendix:

APPENDIX A – Principal General Subcontractors

B. The Low bidder, and the Second and Third Bidders, if requested, shall execute and submit to the Owner and Architect the remaining SUBCONTRACTOR AND MATERIAL QUESTIONNAIRES.

Submit to the Owner and Architect: IU and MSKTD & Associates, the following appendices **within 48 hours after date and time for receiving bids**.

APPENDIX B – Supplementary General Construction Information
APPENDIX C - Supplementary Mechanical Construction Information
APPENDIX D - Supplementary Electrical Construction Information

APPENDIX A – PRINCIPAL GENERAL SUBCONTRACTORS

A. The following Work will be performed (or provided) by subcontractors and their performance of the Work will be coordinated by us:

B. The Bidder will make no changes to this list after submission, without a written request by the bidder and approval by the Owner.

WORK SUBJECT	SUBCONTRACTOR
Cast in Place Concrete	
Plant Precast Structural Concrete and Erection	
Unit Masonry and Anchored Stone Veneer	
Structural Steel Framing, Joists, Deck, Stairs, Etc.	
Structural Steel Erection	
Carpentry	
TPO Roofing and Insulation	
Doors, Frames, and Hardware	
Aluminum Entrances and Storefronts	
Glazed Aluminum Curtain Walls	
Fiberglass Windows	
Gypsum Wall Assemblies, Non-Struct. Mtl.	
Tiling, Resilient Wall and Flooring, Carpet	
Painting	
Electric Traction Elevators	

APPENDIX A – PRINCIPAL GENERAL SUBCONTRACTORS (CONTINUED)

WORK SUBJECT	SUBCONTRACTOR
Mechanical	
Plumbing	
Fire Protection	
Controls	
Sheet Metal	
Testing and Balance	
Mechanical Insulation	
Electrical	
Medium Voltage Electrical	
Telecommunications	
Fire Alarm	

APPENDIX B - SUPPLEMENTARY GENERAL CONSTRUCTION INFORMATION

A. The following Work will be performed (or provided) by subcontractors and their performance of the Work will be coordinated by us:

B. We submit the following list of manufactures (or fabricators) of materials, applications, and specialties. All such materials, appliances, and specialties to be of such characteristics, design and construction will meet the requirements of the Construction Documents. The Bidder will make no changes to this list after submission, without a written request by the bidder and approval by the Owner.

ITEM	SUBCONTRACTOR	MANUFACTURER/SUPPLIER
Demolition		
Cast in Place Concrete		
Plant Precast Structural Concrete		
Plant Precast Concrete Erection		
Precast Architectural Concrete		
Concrete Unit Masonry		
Site Limestone Masonry		
Anchored Limestone Masonry Veneer		
Struct. Stl. Framing, Joists, Deck, Stairs		
Cold Form Metal Framing		
Structural Steel Erection		
Stainless Steel Pipe Railings		
Metal Gratings		

APPENDIX B - SUPPLEMENTARY GENERAL CONSTRUCTION INFORMATION (CONT.)

ITEM	SUBCONTRACTOR	MANUFACTURER/SUPPLIER
Carpentry		
Millwork and Wood Trim Fabrication		
Waterproofing		
Thermal Insulation		
Mod. Bit. Sheet Air Barrier		
Insulated Metal Wall Panels		
TPO Roofing and Insulation		
Sheet Metal Flashings and Trim		
Firestopping and Fire Resistive Joints		
Hollow Metal Doors and Frames		
Flush Wood Doors		
Overhead Coiling Grilles		
Sound Control Door Assemblies		
Door Hardware		
Aluminum Entrances and Storefronts		
Glazed Aluminum Curtain Walls		

APPENDIX B - SUPPLEMENTARY GENERAL CONSTRUCTION INFORMATION (CONT.)

ITEM	SUBCONTRACTOR	MANUFACTURER/SUPPLIER
Fiberglass Windows		
Glazing		
Fixed Louvers		
Gypsum Bd. Assemblies		
Non Structural Metal Framing		
Gypsum Board		
Ceramic Tiling		
Acoustical Panel Ceilings		
Resilient Wall Base and Accessories		
Resilient Sheet Flooring		
Terrazzo Flooring (ALTERNATE)		
Resinous Flooring		
Carpeting		
Painting		
Visual Display Surfaces		
Toilet Compartments		
Impact Resistant Wall Protection		

APPENDIX B - SUPPLEMENTARY GENERAL CONSTRUCTION INFORMATION (CONT.)

ITEM	SUBCONTRACTOR	MANUFACTURER/SUPPLIER
Toilet, Bath and Laundry Accessories		
Fire Extinguisher Cabinets		
Postal Specialties		
Site Furnishings		
Roller Shades		
Residential Casework		
Simulated Stone Countertops		
Fabricated Structures		
Projection Screens		
Electric Traction Elevators		
Earthwork and Site Clearing		
Termite Control		
Water Distribution Systems		
Sanitary Sewerage Utilities		
Storm Drainage Utilities		
Asphalt Paving		
Concrete Paving		

APPENDIX B - SUPPLEMENTARY GENERAL CONSTRUCTION INFORMATION (CONT.)

ITEM	SUBCONTRACTOR	MANUFACTURER/SUPPLIER
Landscape Turf, Grasses & Plants (ALT)		

APPENDIX C - SUPPLEMENTARY MECHANICAL CONSTRUCTION INFORMATION

A. The following Work will be performed (or provided) by subcontractors and their performance of the Work will be coordinated by us:

B. We submit the following list of manufactures (or fabricators) of materials, applications, and specialties. All such materials, appliances, and specialties to be of such characteristics, design and construction will meet the requirements of the Construction Documents. The Bidder will make no changes to this list after submission, without a written request by the bidder and approval by the Owner.

ITEM	SUBCONTRACTOR	MANUFACTURER/SUPPLIER
Water-Based Fire-Suppression Systems		
Electric-Drive, Vertical-Turbine Fire Pumps		
Pressure-Maintenance Pumps		
Controllers for Fire-Pump Drivers		
Meters and Gages for Plumbing Piping		
General-Duty Valves for Plumbing Piping		
Plumbing Piping Insulation		
Domestic Water Piping		
Domestic Water Piping Specialties		
Domestic Water Pumps		
Domestic-Water Packaged Booster Pumps		
Sanitary Waste and Vent Piping		
Sanitary Waste Piping Specialties		

APPENDIX C - SUPPLEMENTARY MECHANICAL CONSTRUCTION INFORMATION (CONTINUED)		
Facility Storm Drainage Piping		
Storm Drainage Piping Specialties		
Domestic-Water Heater Exchangers		
Plumbing Fixtures		
Drinking Fountains and Water Coolers		
Motors		
Meters and Gages		
Valves		
Mechanical Vibration Isolation		
Testing, Adjusting, and Balancing		
Mechanical Insulation		
HVAC Instrumentation and Controls		
Sequence of Operations for HVAC Controls		
Hydronic Piping		
Hydronic Piping Specialties		
Hydronic Pumps		
Steam and Condensate Piping		
Steam Condensate Pumps		

APPENDIX C - SUPPLEMENTARY MECHANICAL CONSTRUCTION INFORMATION (CONTINUED)		
Metal Ducts		
Duct Accessories		
Fans and Ventilators		
Air Terminal		
Diffusers, Registers, and Grilles		
Air Filters		
Solar Thermal Systems		
Heat Exchangers for HVAC		
Air-Handling Units		
High Rise Fan Coil Units		
Radiators		
Convectors		
Unit Heaters		

APPENDIX D - SUPPLEMENTARY ELECTRICAL CONSTRUCTION INFORMATION

A. The following Work will be performed (or provided) by subcontractors and their performance of the Work will be coordinated by us:

B. We submit the following list of manufactures (or fabricators) of materials, applications, and specialties. All such materials, appliances, and specialties to be of such characteristics, design and construction will meet the requirements of the Construction Documents. The Bidder will make no changes to this list after submission, without a written request by the bidder and approval by the Owner.

ITEM	SUBCONTRACTOR	MANUFACTURER/SUPPLIER
Medium –Voltage Cables		
Raceways, Boxes & Cabinets		
Cable Trays		
Secondary Unit Substations		
Underground Ducts and Utility Structures		
Wires and Cables		
Medium-Voltage Switchgear		
Wiring Devices		
Circuit and Motor Disconnects		
Supporting Devices		
Transfer Switches		
Switchboards		
Grounding		

APPENDIX D - SUPPLEMENTARY ELECTRICAL CONSTRUCTION INFORMATION (CONTINUED)		
Transformers		
Panelboards		
Variable Frequency Drives		
Motor Controllers		
Interior Lighting		
Lightning Protection Systems		
Surge Protection Devices		
Structured Cabling		
Access Control Systems		
Digital, Addressable Fire-Alarm System		

Reference Mechanical, Plumbing, and Sprinkler sheets and specification sections 21,22 and 23
Refer to the following table for status of approval for product substitutions.

Spec / Drawing Ref.	MFGR.	Description	Approved (Yes/No)
221123.13	Patterson/ Flow-Pak	Domestic Water Booster Pump System	Yes
232123	Patterson	Inline and end suction pumps	Yes
232116	Patterson	Expansion Tanks	Yes
232116	Patterson	Air Separators	Yes
233300	Reversomatic model CVC	Constant Airflow Regulators	Yes
233300	Pottorff/NCA	HVAC dampers	Yes
233423	Twin City	Fans and Ventilators	Yes
233600	Metalaire	Air Terminals	Yes
233713	Metalaire	Diffusers, Registers, Grilles	Yes
234100	Camfil Farr	Air Filters	Yes
237313.2.1.A	Carrier	Custom Air Handlers	
237313.2.1.B	Carrier	Blower Coil Air Handlers	Yes
238219.2.1A	Carrier	High Rise Fan Coil Units	No
238233	Carrier	Convectors	Yes
224000-4	Speakman	Lavatory Faucets	No
224000-4	Speakman	Shower Faucets	No
224000-4	Powers	Shower Faucets	No
220523	Milwaukee Valves	Plumbing and HVAC valves	Yes
220523	Hammond Valves	Plumbing and HVAC valves	Yes
221119	Wilkins	Expansion Tanks	Yes
224000	Elkay	Water Cooler	Yes
224000	Halsey Taylor	Water Cooler	Yes
223500	Thrush	Water Heaters	Yes
238239	Sigma	Unit Heaters	No
238239	Sigma	Cabinet Heaters	No

238229	Sigma	Flat Pipe Radiators	No
221123.13-2.1-A	Bell and Gossett	Domestic Booster Pumps	Yes
230519-2.1-A-1	Terice	Gauges and Thermometers	Yes
2211213.13-2.1-H-3	Cemline	Domestic Water Heaters	No
232223-2.1-A-1	Domestic	Condensate Pumps	Yes
235613	Niles	Solar Tanks	No
235613	Bock	Solar Tanks	No

Specification 270000-17

Coaxial cabling: See picture showing the wall mounted solution for terminating coaxial drops.

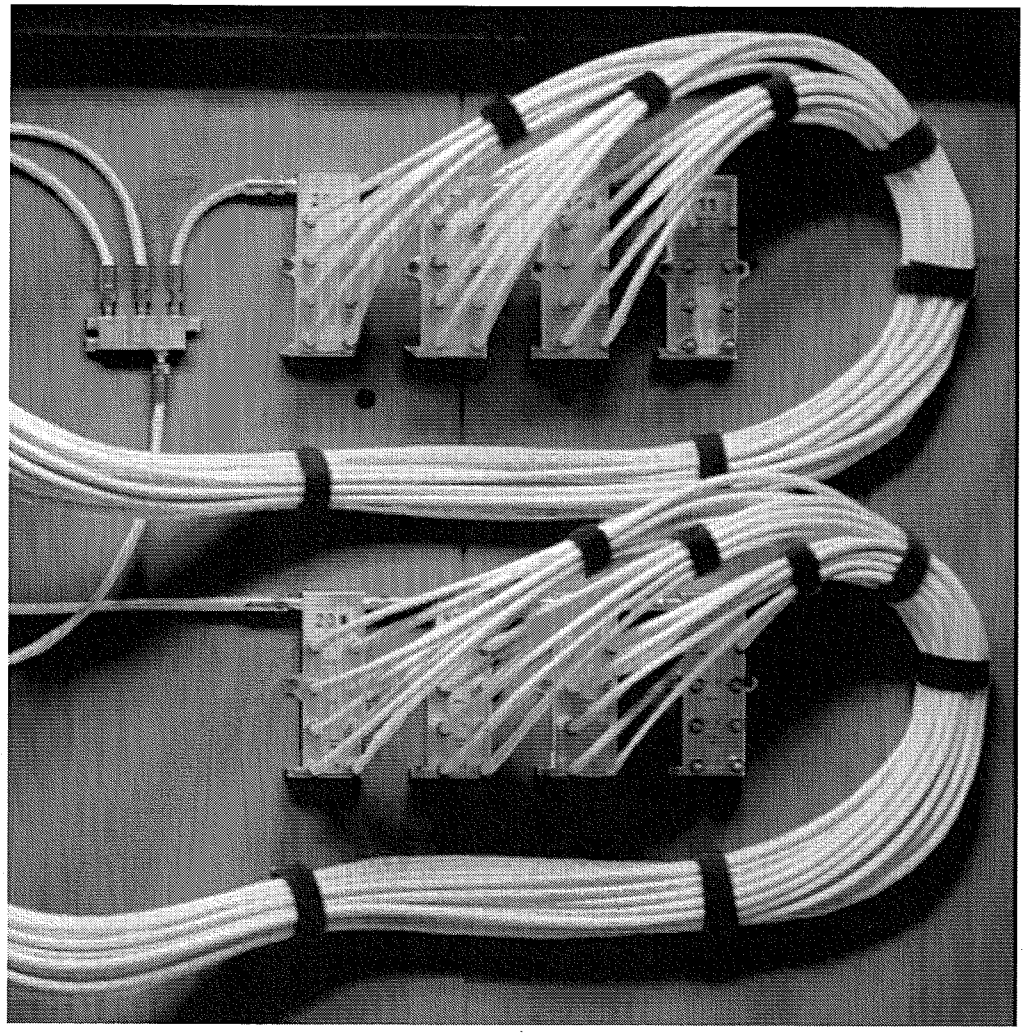

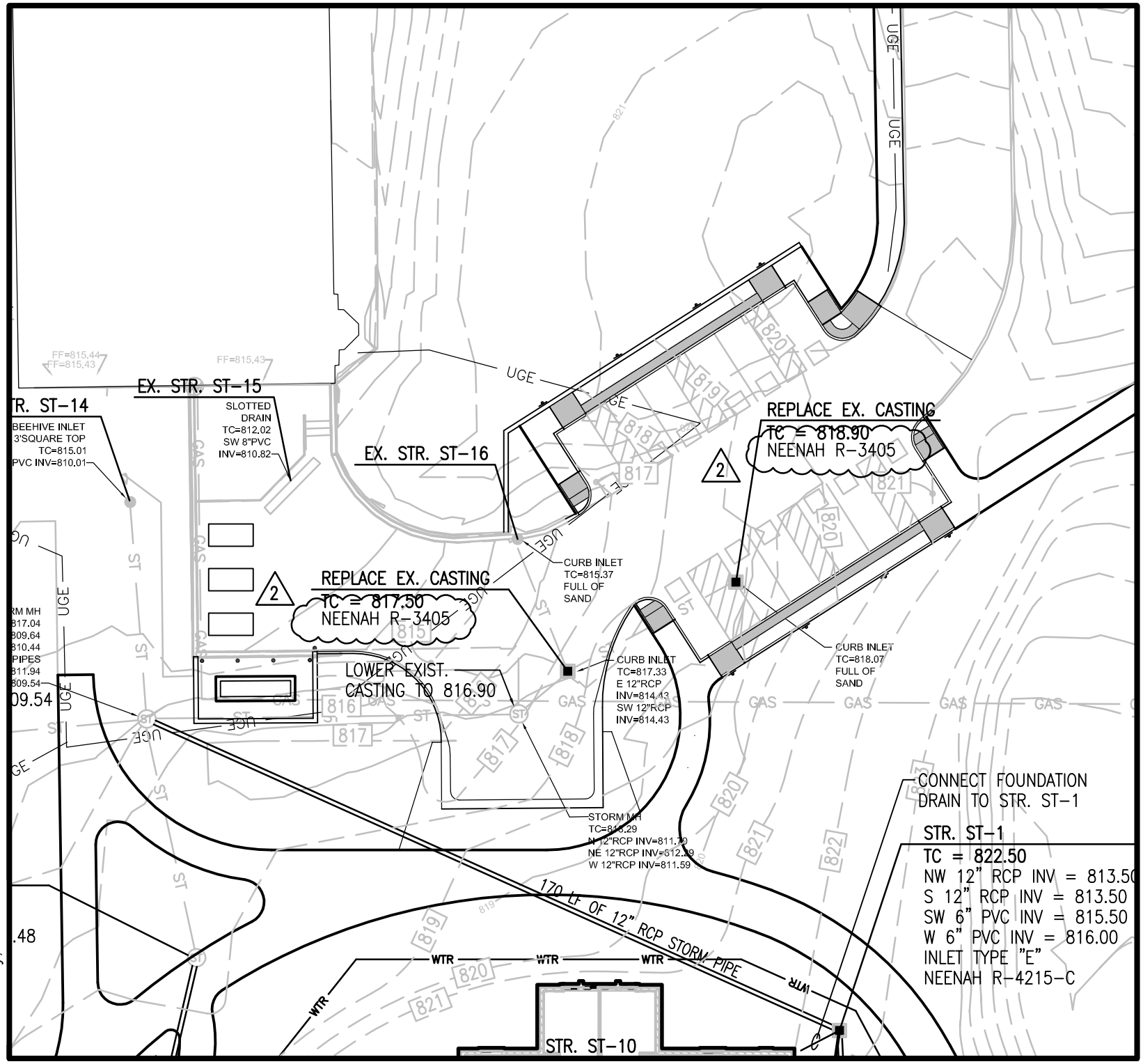

01 January, 2000

MSKTD & Associates, Inc.

ARCHITECTURE ENGINEERING INTERIOR DESIGN

1715 MAGNAVOX WAY
FORT WAYNE, IN 46804
voice 260.432.9337

930 NORTH MERIDIAN
INDIANAPOLIS, IN 46204
voice 317.917.1190

http://www.msktd.com

Indiana University
Rose & Jones Residence Hall

IU # 20106837
1801 East Jones Avenue
Bloomington, Indiana

DATE	1-31-12
COMMISSION NUMBER	5804
SHEET NUMBER	D2.057

D2.C4-sk1

SECTIONAL VIEW
SANITARY MANHOLE

MANHOLE CONSTRUCTION
Manhole shall be 4500 p.s.i. concrete reinforced with 10 x 10 – W10 x W10 welded wire fabric.
Wall and base thickness shall be a minimum of 5".

PRECAST CONCRETE RISER RINGS
No more than 12" of rings may be used to adjust the frame and cover to grade.

PRECAST ECCENTRIC TOP SECTION
Precast flat tops shall be used when the manhole is less than than 6' deep. See detail below.

JOINT SEALING
Joints between all manhole sections shall be sealed with an approved rubber gasket. Outside joints shall be sealed with a Trowelable Butyl Rubber.

PRECAST MANHOLE BARREL SECTION

COMBINED PRECAST MANHOLE BASE and BARREL SECTION
The base and first barrel section shall be monolithic and additionally reinforced with 4 – #4 bar els 60" long.

CAST or CORE DRILLED OPENINGS
All openings shall be at least 3" from the top of the base part of the precast section.

BEDDING
4" of #11 stone on soil or
6" of #11 stone on rack

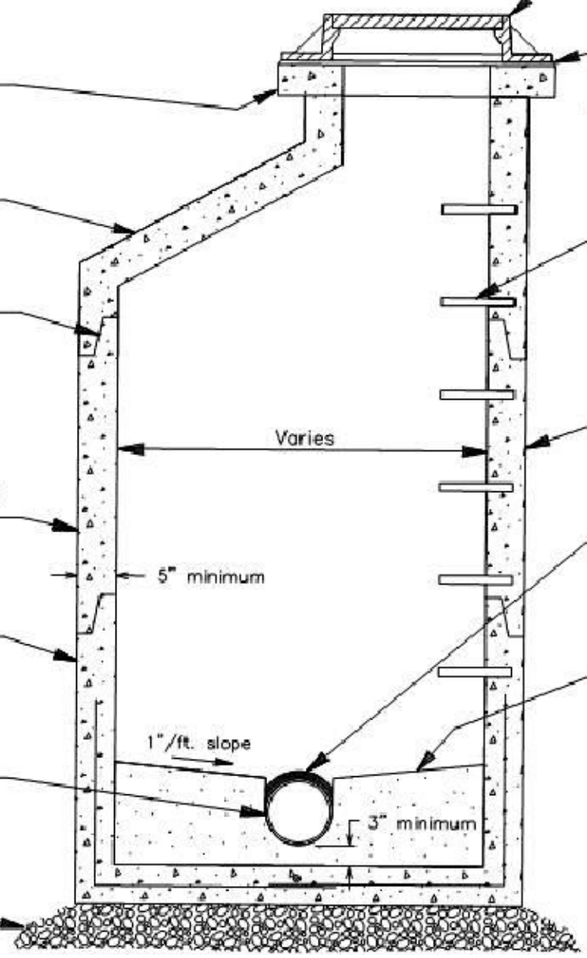

MANHOLE FRAME AND COVER
Frame shall be East Jordan Iron Works casting no. 1020, 1022 or an approved equivalent.
Cover shall be East Jordan Iron Works casting no. 1020A or an approved equivalent. "SANITARY SEWER" shall be cast in each cover.
All castings shall be coated.
Frame shall be set on Butyl Rubber Rope.

MANHOLE STEPS
Shall be constructed of Fiberglas reinforced polypropolene.
Install with nonshrink mortar or epoxy grout 12" to 16" apart and at a location allowing access to the table.

MANHOLE SEALANT
See 4.4.2.2.6 of CBU Specifications.

GASKETS and BOOTS
Pipe to manhole connections shall be flexible boot or cast in place gasket. See special detail below and 4.4.2.2.5 of CBU Specifications.

TROUGH and TABLE
Construct with concrete brick, and non-shrink mortar.
Troughs shall be smooth with a semicircular bottom and extend upward to the height of the pipe crown. The table shall be smooth and slope toward the trough at 1"/ft.

PIPE CONNECTIONS TO MANHOLE

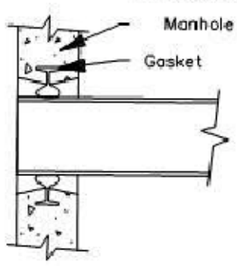

Cast in place gasket

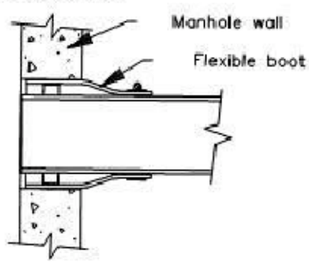

Flexible boot connector

TROUGH CONSTRUCTION

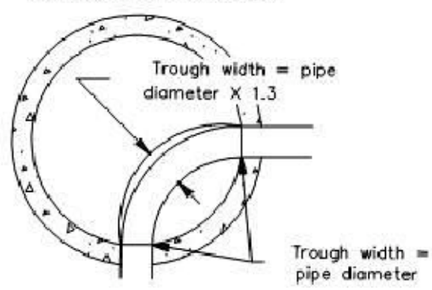

MINIMUM PIPE INVERT DROP THROUGH MANHOLE

TROUGH DEFLECTION	MIN. DROP (Ft.)
0° – 22°	.10
23° – 45°	.20
46° – 90°	.30

PRECAST SECTION JOINT

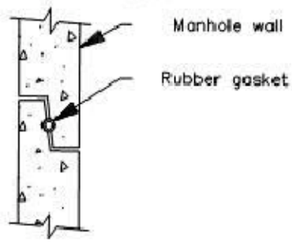

FLAT TOP CONSTRUCTION

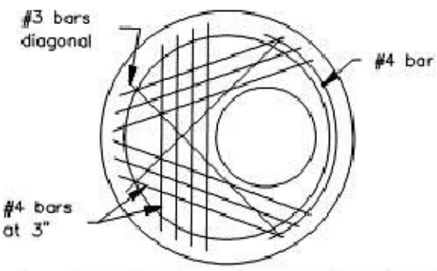

City of Bloomington Utilities Engineering Department

NO SCALE
2/21/94
by: M. Hicks

Drawing File: I:\COMMON\STANDARD DRAWINGS\STD 1.DWG
REVISED 02/18/08 T.A.

STANDARD SANITARY MANHOLE

STANDARD DETAIL NUMBER 1

DATE 1-31-12
COMMISSION NUMBER 5804
D2.059
D2.C8-sk2

Indiana University
Rose & Jones Residence Hall

IU # 20106837
1801 East Jones Avenue
Bloomington, Indiana

MSKTD & Associates, Inc.
ARCHITECTURE ENGINEERING INTERIOR DESIGN
930 NORTH MERIDIAN
INDIANAPOLIS, INDIANA 46204
voice 317.917.1100
1715 MAGNAVOX WAY
FORT WAYNE, INDIANA 46804
voice 260.432.5307
http://www.msktd.com

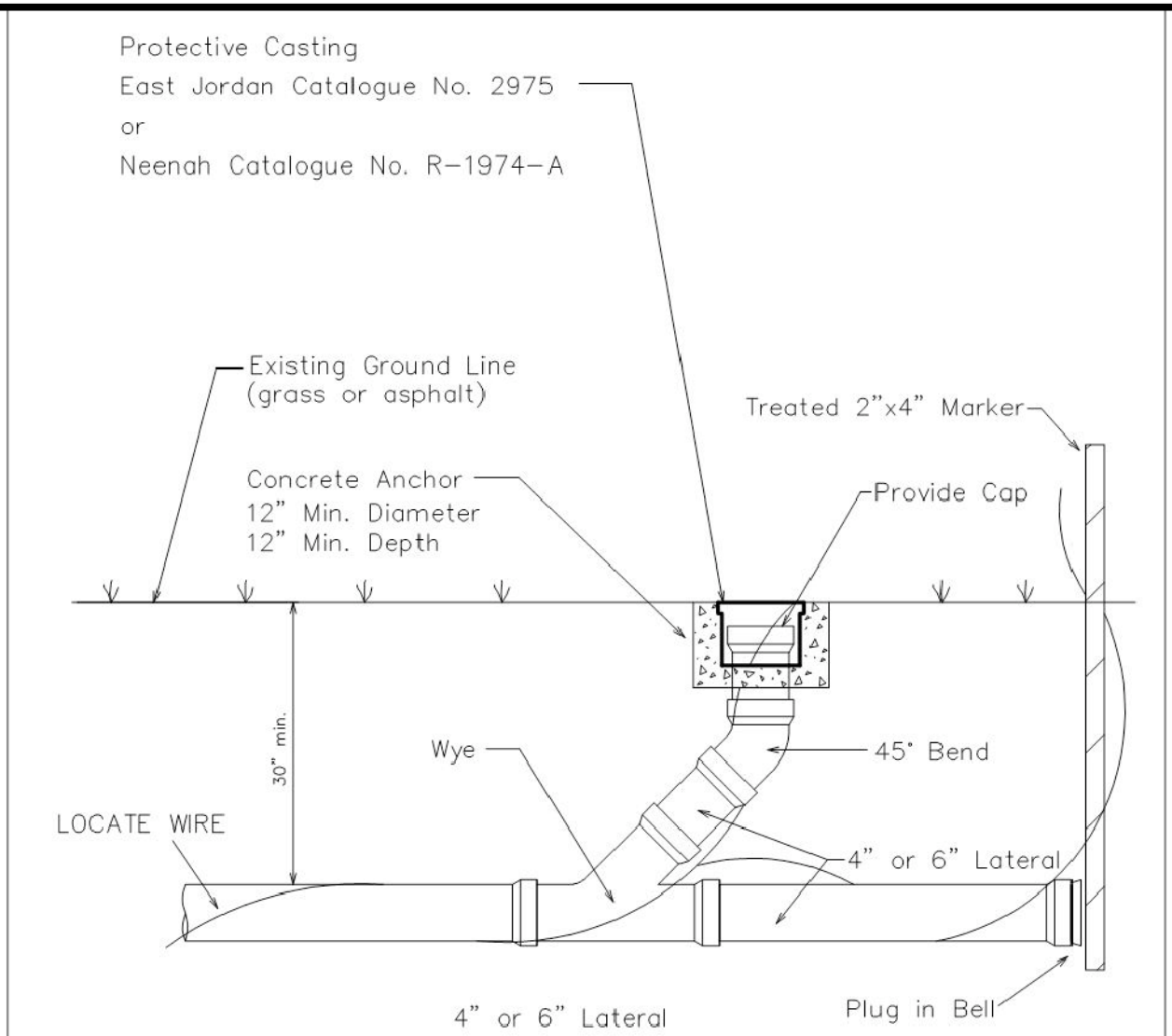

#10 solid insulated locate wire required from the city main to the clean-out at the property line.

PROFILE

City of Bloomington Utilities Engineering Department	STANDARD SANITARY LATERAL CLEAN-OUT FOR 4" AND 6" PIPES	STANDARD DETAIL NUMBER 19
NO SCALE REVISED 02/26/10 — Drawing File: I:\COMMON\STANDARD DRAWINGS\STD19.DGN		

Indiana University
Rose & Jones Residence Hall

IU # 20106837
1801 East Jones Avenue
Bloomington, Indiana

MSKTD & Associates, Inc.
ARCHITECTURE ENGINEERING INTERIOR DESIGN
1715 MAGNAVOX WAY
FORT WAYNE, IN 46804
voice 260.432.9337
930 NORTH MERIDIAN
INDIANAPOLIS, IN 46204
voice 317.917.1190
http://www.msktd.com

DATE 1-31-12
COMMISSION NUMBER 5804
SHEET NUMBER D2.060
D2.C8-sk3

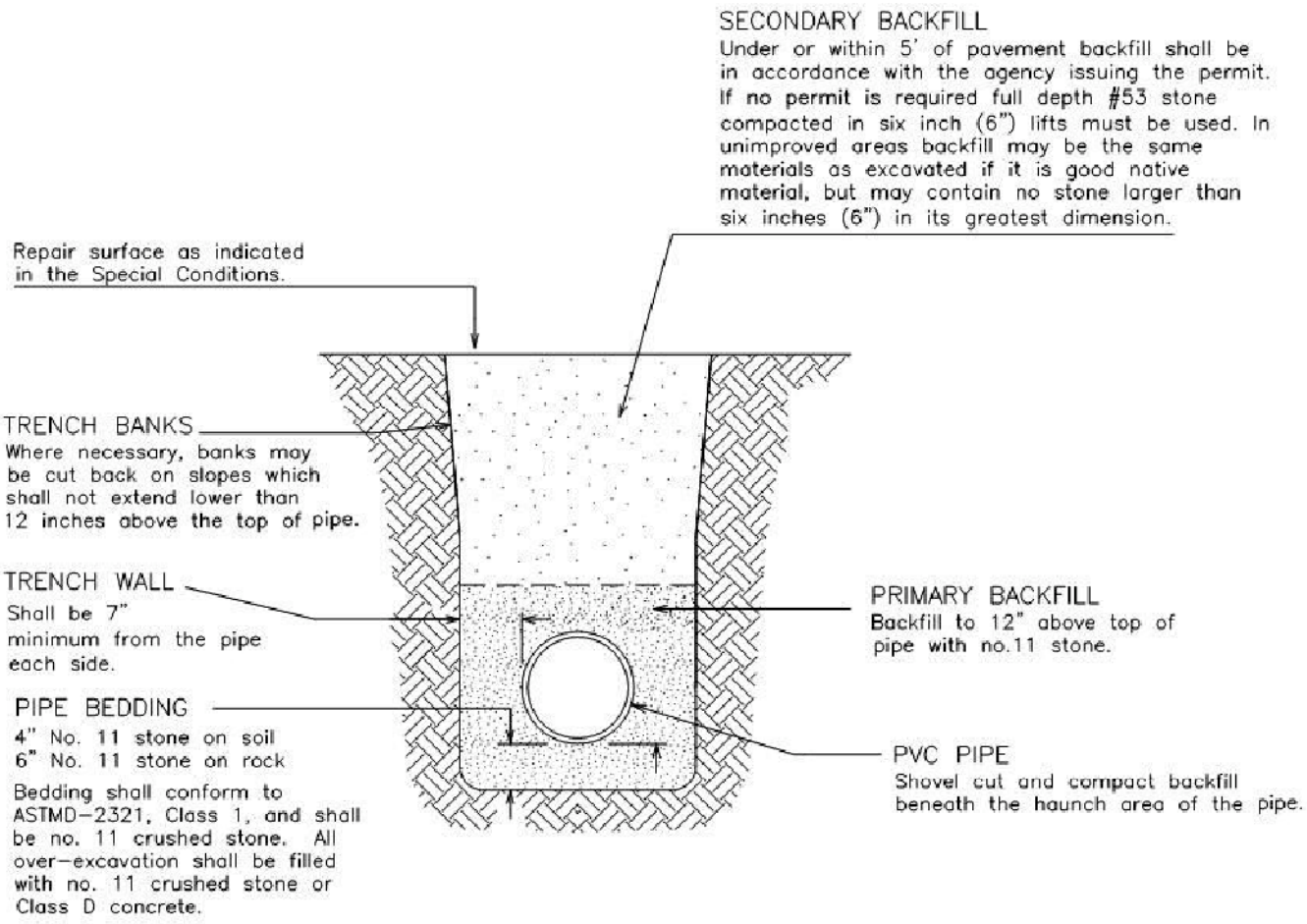

TRENCH SAFETY SYSTEMS
All trench work shall be in compliance with OSHA Part 26 of the Code of Federal Regulations.

EXCAVATION DEPTH
When pipe grades are not defined on the contract drawings, maintain a minimum of 48 inches of cover over the top of the pipe except as otherwise ordered by the Engineer.

Revised 2/11/2011 G.N.
Revised 2/13/2008 T.A.

City of Bloomington Utilities Engineering Department

NO SCALE
10/5/98
M. Hicks

Drawing File:
I:\COMMON\STANDARD DRAWINGS\STD11.DGN

BEDDING AND BACKFILL DETAIL FOR PVC AND HDPE PIPE

STANDARD DETAIL NUMBER 11

SHEET NUMBER D2.C8-sk4

COMMISSION NUMBER D2.061

5804

DATE 1-31-12

Indiana University
Rose & Jones Residence Hall

IU # 20106837
1801 East Jones Avenue
Bloomington, Indiana

MSKTD & Associates, Inc.
ARCHITECTURE ENGINEERING INTERIOR DESIGN
1715 MAGNAVOX WAY
FORT WAYNE, IN 46804
voice 260.432.9337
930 NORTH MERIDIAN
INDIANAPOLIS, IN 46204
voice 317.917.1190
http://www.msktd.com

NOTES

1. For connection to existing water mains, a 6" tapping valve and saddle shall be used in place of the gate valve and anchor coupling.

FIRE HYDRANT

Fire hydrants shall conform to ANSI/AWWA C502 and must be Kennedy Guardian model K81 or Mueller Super Centurion 200 (catalog no. A-423) or Waterous Pacer Classic. These are dry-barrel type firehydrants with a 5." main valve opening, two hose nozzles and one pumper nozzle. Hydrants shall have a mechanical joint type connection and shall be painted according to 4.4.4.4. FIRE HYDRANTS.

Install fire hydrant at a minimum of 2' from structures or obstructions and set the hydrant bury line 2" above finished grade. The pumper nozzle must face the street.

6" M.J. GATE VALVE (See Note 1)
Gate valves shall be cast iron body, fully bronze mounted, with a resilient seat and a non rising stem in accordance with AWWA C509.

VALVE BOX
Valve box shall be a cast iron, three-piece adjustable type. Cover shall be labeled "WATER".

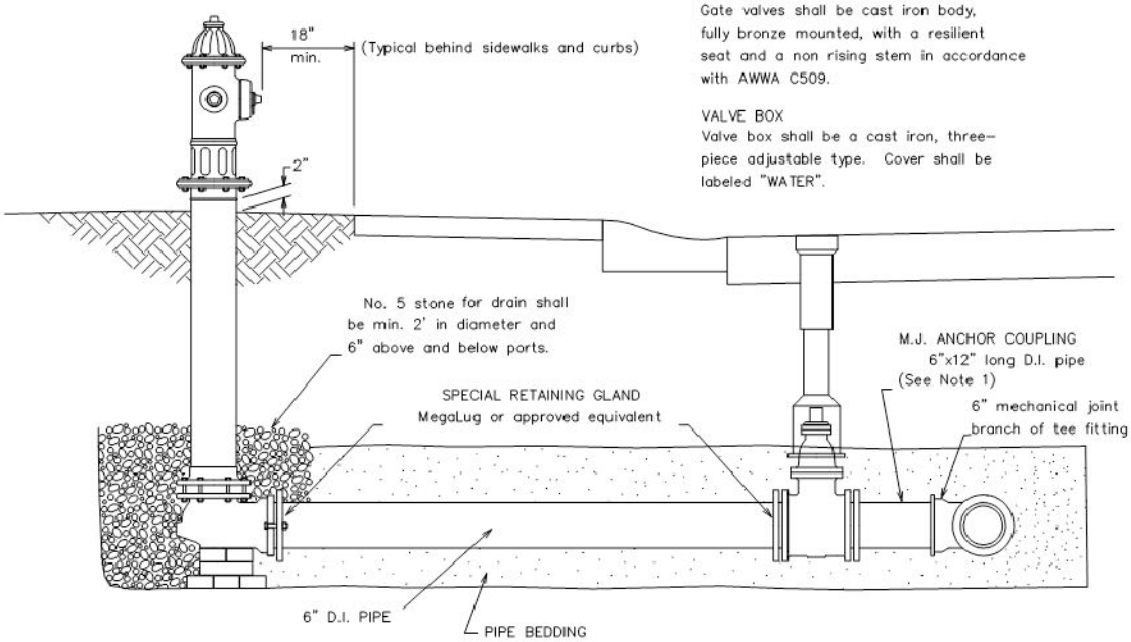

BACKFILL
No. 11 stone from bedding to 1' over top of pipe. Compacted No. 53 stone beneath and within 5' of pavement or clean native soil in other areas.

REVISED 02/15/2011 G.N.
REVISED 02/23/2010 T.L.
REVISED 02/08/2008 T.A.

City of Bloomington Utilities Engineering Department

NO SCALE
9/1/94
M. Hicks

Drawing File: I:\COMMON\STANDARD DRAWINGS\STD8.DGN

STANDARD FIRE HYDRANT AND CONNECTION DETAIL

STANDARD DETAIL NUMBER 8

SHEET NUMBER D2.062
D2.C8-sk5

COMMISSION NUMBER 5804

DATE 1-31-12

Indiana University
Rose & Jones Residence Hall

IU # 20106837
1801 East Jones Avenue
Bloomington, Indiana

MSKTD & Associates, Inc.
ARCHITECTURE ENGINEERING INTERIOR DESIGN
1715 MAGNAVOX WAY
FORT WAYNE, IN 46804
voice 260.432.9337
930 NORTH MERIDIAN
INDIANAPOLIS, IN 46204
voice 317.917.1190
http://www.msktd.com

SECONDARY BACKFILL

Under, or within 5' of pavement, backfill shall be in accordance with the agency issuing the permit. If no permit is required, full depth #53 stone compacted in six inch (6") lifts must be used. In unimproved areas, backfill may be the same materials as excavated if it is good native material, but may contain no stone larger than six inches (6") in its greatest dimension.

Repair surface as indicated in the Special Conditions.

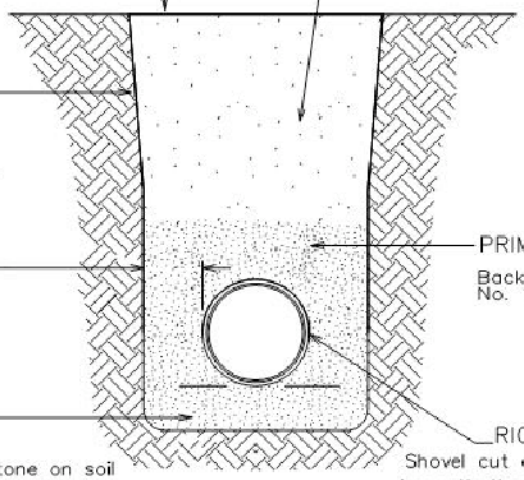

TRENCH BANKS

Where necessary, banks may be cut back on slopes which shall not extend lower than 12 inches above the top of pipe.

TRENCH WALL

Shall be 7" minimum from the pipe each side.

PRIMARY BACKFILL

Backfill to extend 12" above pipe with No. 11 or No. 12 stone.

PIPE BEDDING

4" No. 11 stone or no. 12 stone on soil
6" No. 11 stone or no. 12 stone on rock
Bedding shall conform to ASTMD-2321, Class 1, and shall be no. 11 or 12 crushed stone. All over-excavation shall be filled with crushed stone or class D concrete

RIGID PIPE

Shovel cut and compact backfill beneath the haunch area of the pipe.

EXCAVATION DEPTH

When pipe grades are not defined on the contract drawings, maintain a minimum of 48 inches of cover over the top of the pipe except as otherwise ordered by the Engineer.

TRENCH SAFETY SYSTEMS

All trench work shall be in compliance with OSHA Part 26 of the Code of Federal Regulations.

Revised 2/15/2011 G.N.
Revised 2/13/2008 T.A.

City of Bloomington Utilities Engineering Department

NO SCALE Drawing File:
02/01/08 I:\COMMON\STANDARD DRAWINGS\STD12.DGN

BEDDING AND BACKFILL DETAIL FOR ALL RIGID PIPES

STANDARD DETAIL NUMBER 12

SHEET NUMBER D2.063
D2.C8-sk6

COMMISSION NUMBER 5804

DATE 1-31-12

Indiana University
Rose & Jones Residence Hall

IU # 20106837
1801 East Jones Avenue
Bloomington, Indiana

MSKTD & Associates, Inc.
ARCHITECTURE ENGINEERING INTERIOR DESIGN
1715 MAGNAVOX WAY FORT WAYNE, IN 46804 voice 260.432.9337
930 NORTH MERIDIAN INDIANAPOLIS, IN 46204 voice 317.917.1190
http://www.msktd.com

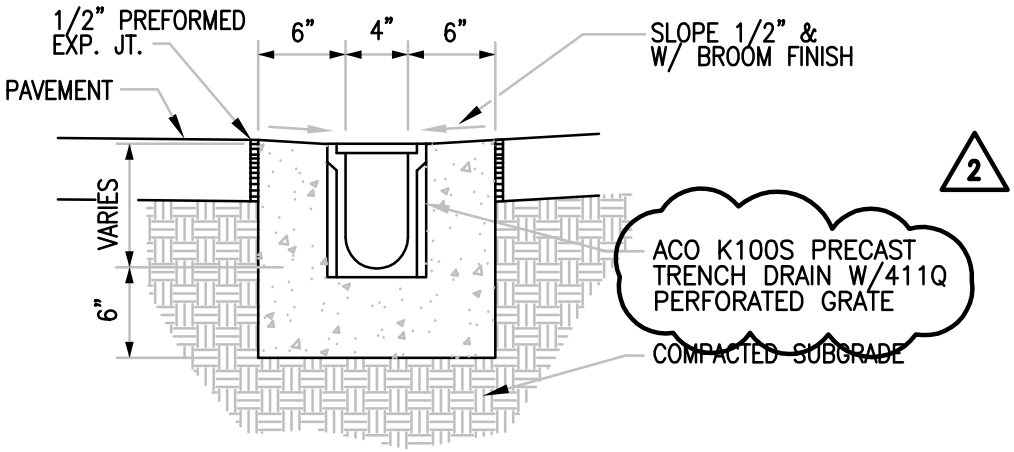

TRENCH DRAIN DETAIL - ST10 & ST11

NO SCALE

12
C8.0

MSKTD
& Associates, Inc.
ARCHITECTURE ENGINEERING INTERIOR DESIGN
1715 MAGNAVOX WAY
FORT WAYNE, IN 46804
voice 260.432.9337
930 NORTH MERIDIAN
INDIANAPOLIS, IN 46204
voice 317.917.1190
http://www.msktd.com

Indiana University
Rose & Jones Residence Hall
IU # 20106837
1801 East Jones Avenue
Bloomington, Indiana

DATE	1-31-12
COMMISSION NUMBER	5804
SHEET NUMBER	D2.064

D2.C8-sk7

01 January, 2000

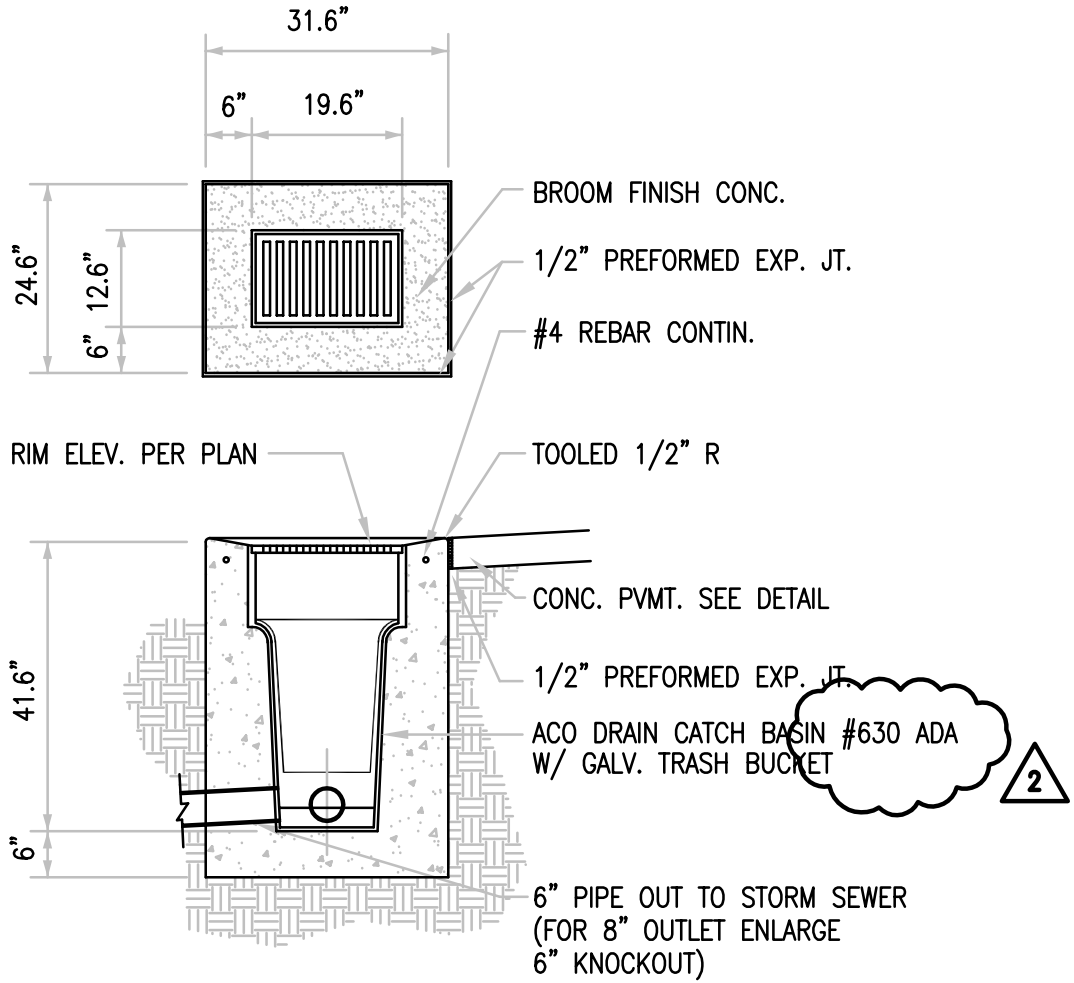

PLAZA DRAIN DETAIL

NTS

9
C8.0

MSKTD & Associates, Inc.
ARCHITECTURE ENGINEERING INTERIOR DESIGN
1715 MAGNAVOX WAY
FORT WAYNE, IN 46804
voice 260.432.9337
930 NORTH MERIDIAN
INDIANAPOLIS, IN 46204
voice 317.917.1190
http://www.msktd.com

Indiana University
Rose & Jones Residence Hall
IU # 20106837
1801 East Jones Avenue
Bloomington, Indiana

DATE	1-31-12
COMMISSION NUMBER	5804
SHEET NUMBER	D2.065

D2.C8-sk8

01 January, 2000

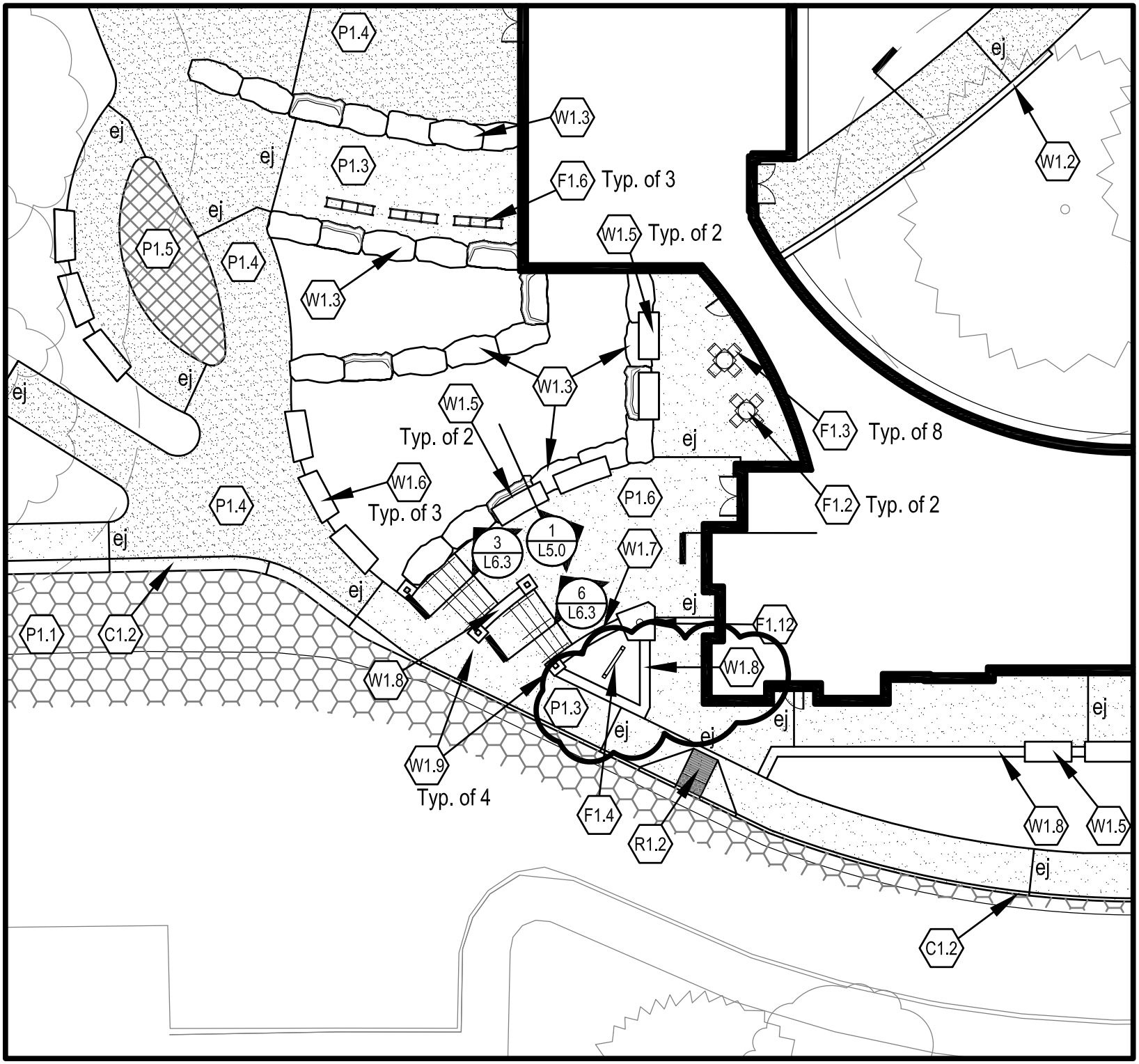

1 February, 2012

MSKTD
& Associates, Inc.
ARCHITECTURE • ENGINEERING • INTERIOR DESIGN

1715 MAGNAVOX WAY
FORT WAYNE, IN 46804
voice 260.432.9337

930 NORTH MERIDIAN
INDIANAPOLIS, IN 46204
voice 317.917.1190

http://www.msktd.com

Indiana University SouthEast Side Residence Hall

IU # 20106837
1801 East Jones Avenue
Bloomington, Indiana

DATE	2.1.2012
COMMISSION NUMBER	5804
SHEET NUMBER	D2.067a

L2.0

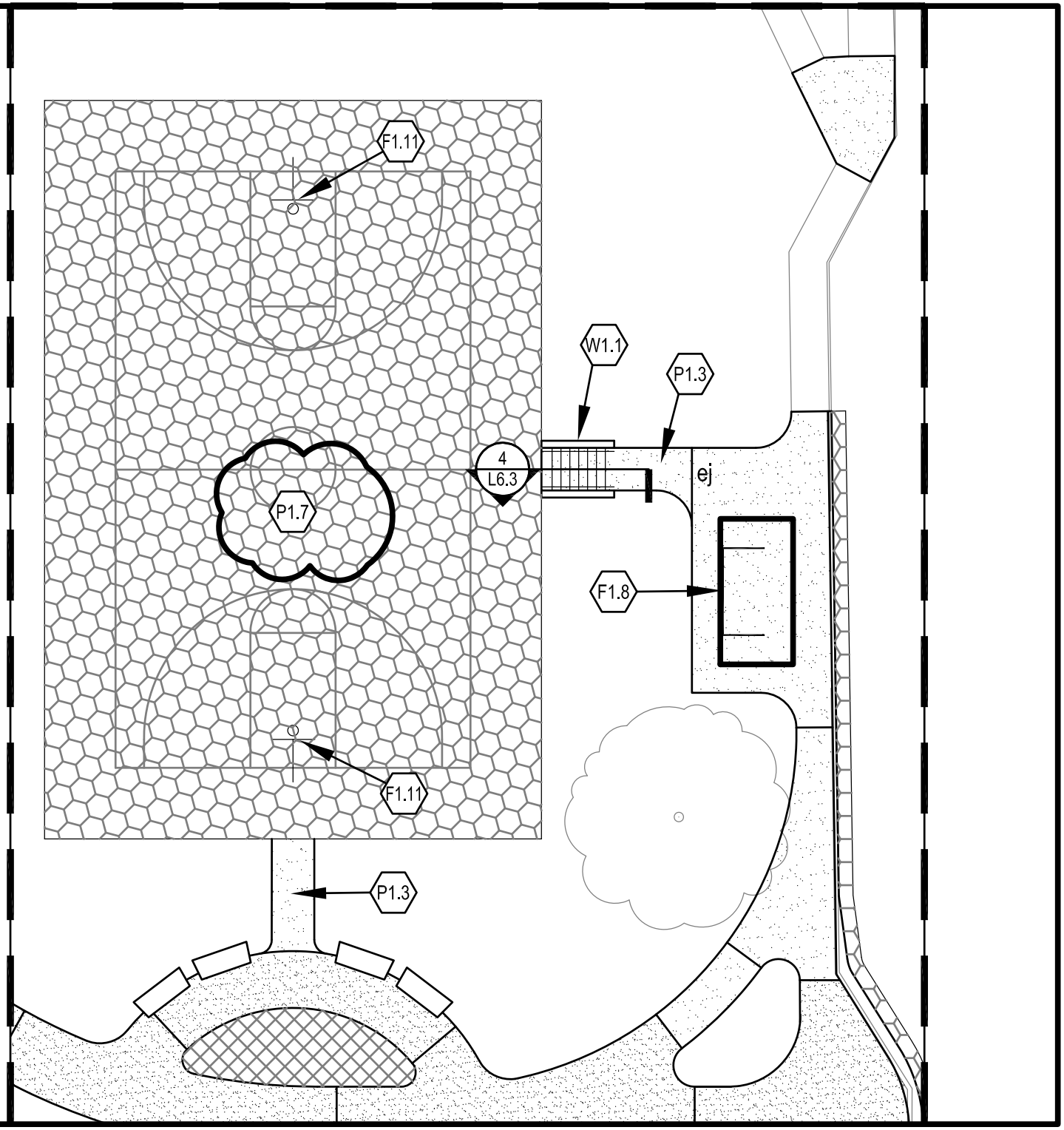

MSKTD
& Associates, Inc.
ARCHITECTURE • ENGINEERING • INTERIOR DESIGN
1715 MAGNAVOX WAY
FORT WAYNE, IN 46804
voice 260.432.9337
930 NORTH MERIDIAN
INDIANAPOLIS, IN 46204
voice 317.917.1190
http://www.msktd.com

Indiana University SouthEast Side Residence Hall

IU # 20106837
1801 East Jones Avenue
Bloomington, Indiana

DATE	2.1.2012
COMMISSION NUMBER	5804
SHEET NUMBER	D2.067b

L2.0

1 February, 2012

MSKTD
& Associates, Inc.
ARCHITECTURE • ENGINEERING • INTERIOR DESIGN
1715 MAGNAVOX WAY
FORT WAYNE, IN 46804
voice 260.432.9337
930 NORTH MERIDIAN
INDIANAPOLIS, IN 46204
voice 317.917.1190
http://www.msktd.com

Indiana University
SouthEast Side Residence Hall

IU # 20106837
1801 East Jones Avenue
Bloomington, Indiana

DATE	2.1.2012
COMMISSION NUMBER	5804
SHEET NUMBER	D2.069a

L4.0

1 February, 2012

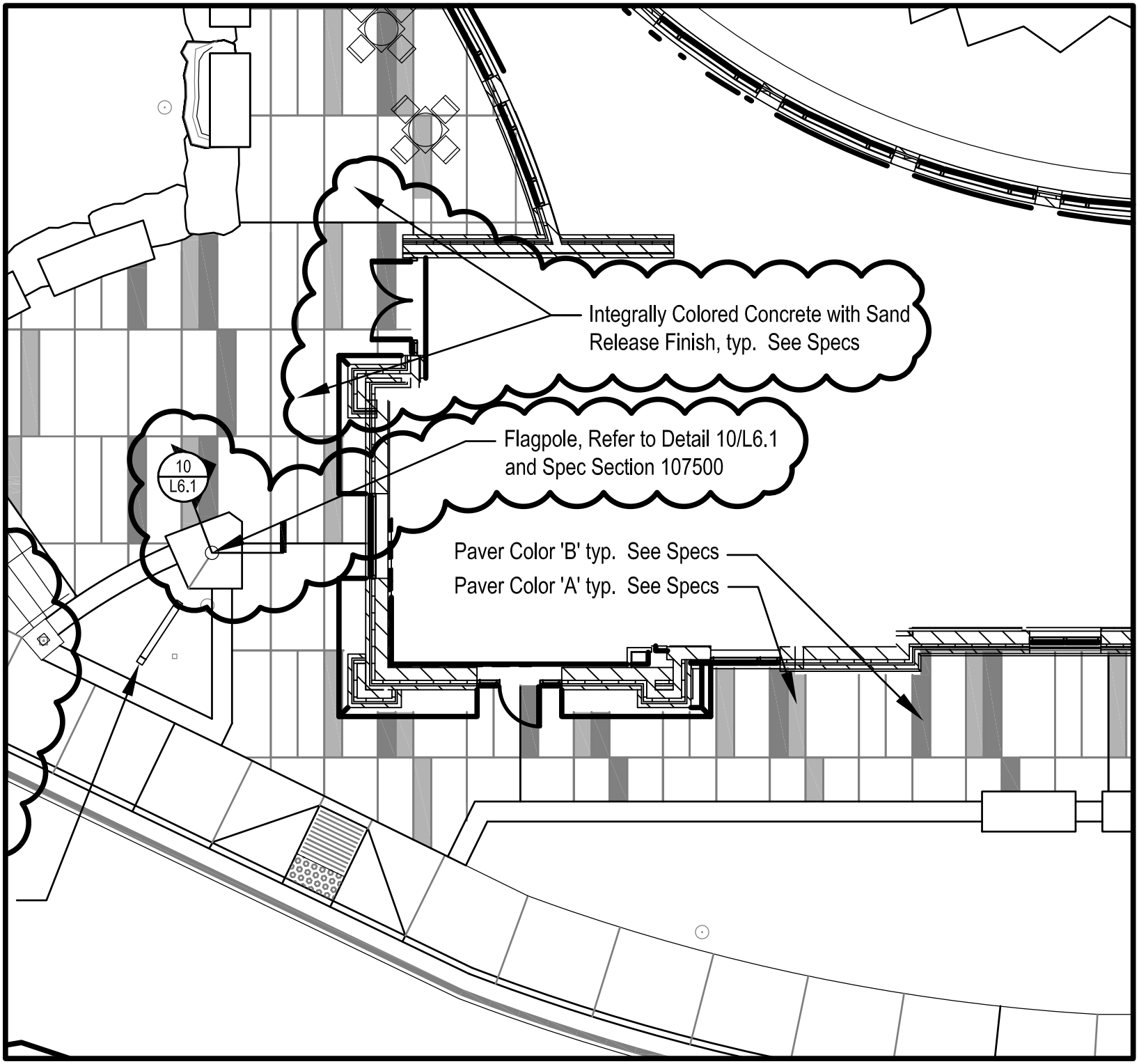

MSKTD
& Associates, Inc.
ARCHITECTURE • ENGINEERING • INTERIOR DESIGN
1715 MAGNAVOX WAY
FORT WAYNE, IN 46804
voice 260.432.9337
930 NORTH MERIDIAN
INDIANAPOLIS, IN 46204
voice 317.917.1190
http://www.msktd.com

Indiana University SouthEast Side Residence Hall

IU # 20106837
1801 East Jones Avenue
Bloomington, Indiana

DATE	2.1.2012
COMMISSION NUMBER	5804
SHEET NUMBER	D2.069b
	L4.0

1 February, 2012

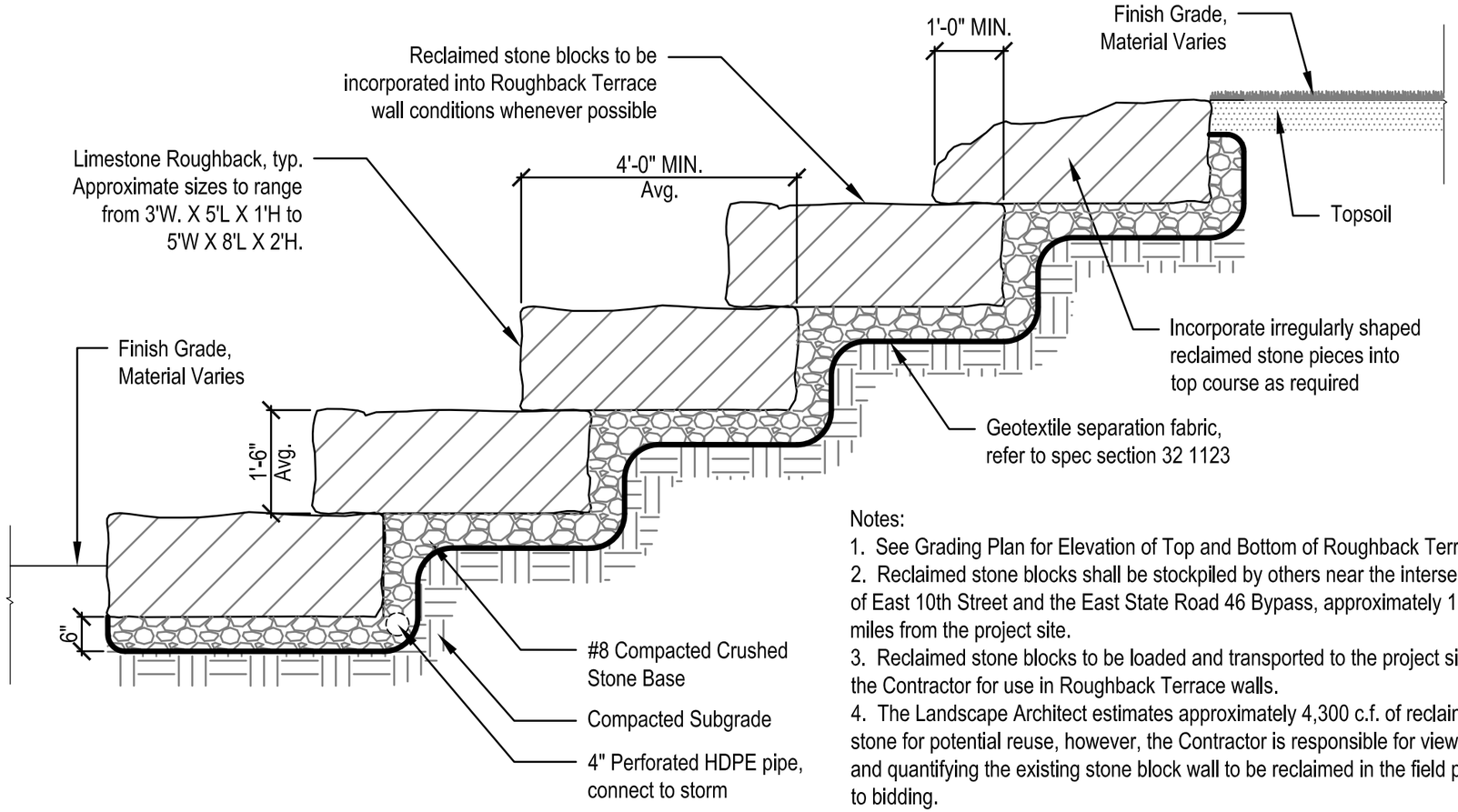

Notes:

1. See Grading Plan for Elevation of Top and Bottom of Roughback Terrace.
2. Reclaimed stone blocks shall be stockpiled by others near the intersection of East 10th Street and the East State Road 46 Bypass, approximately 1.3 miles from the project site.
3. Reclaimed stone blocks to be loaded and transported to the project site by the Contractor for use in Roughback Terrace walls.
4. The Landscape Architect estimates approximately 4,300 c.f. of reclaimed stone for potential reuse, however, the Contractor is responsible for viewing and quantifying the existing stone block wall to be reclaimed in the field prior to bidding.

6 LIMESTONE ROUGHBACK TERRACE

Scale: 1/2: = 1'-0"

MSKTD & Associates, Inc.
ARCHITECTURE • ENGINEERING • INTERIOR DESIGN
1715 MAGNAVOX WAY
FORT WAYNE, IN 46804
voice 260.432.9337
930 NORTH MERIDIAN
INDIANAPOLIS, IN 46204
voice 317.917.1190
http://www.msktd.com

Indiana University
SouthEast Side Residence Hall
IU # 20106837
1801 East Jones Avenue
Bloomington, Indiana

DATE 2.1.2012
COMMISSION NUMBER 5804
D2.072
L6.2

1 February, 2012

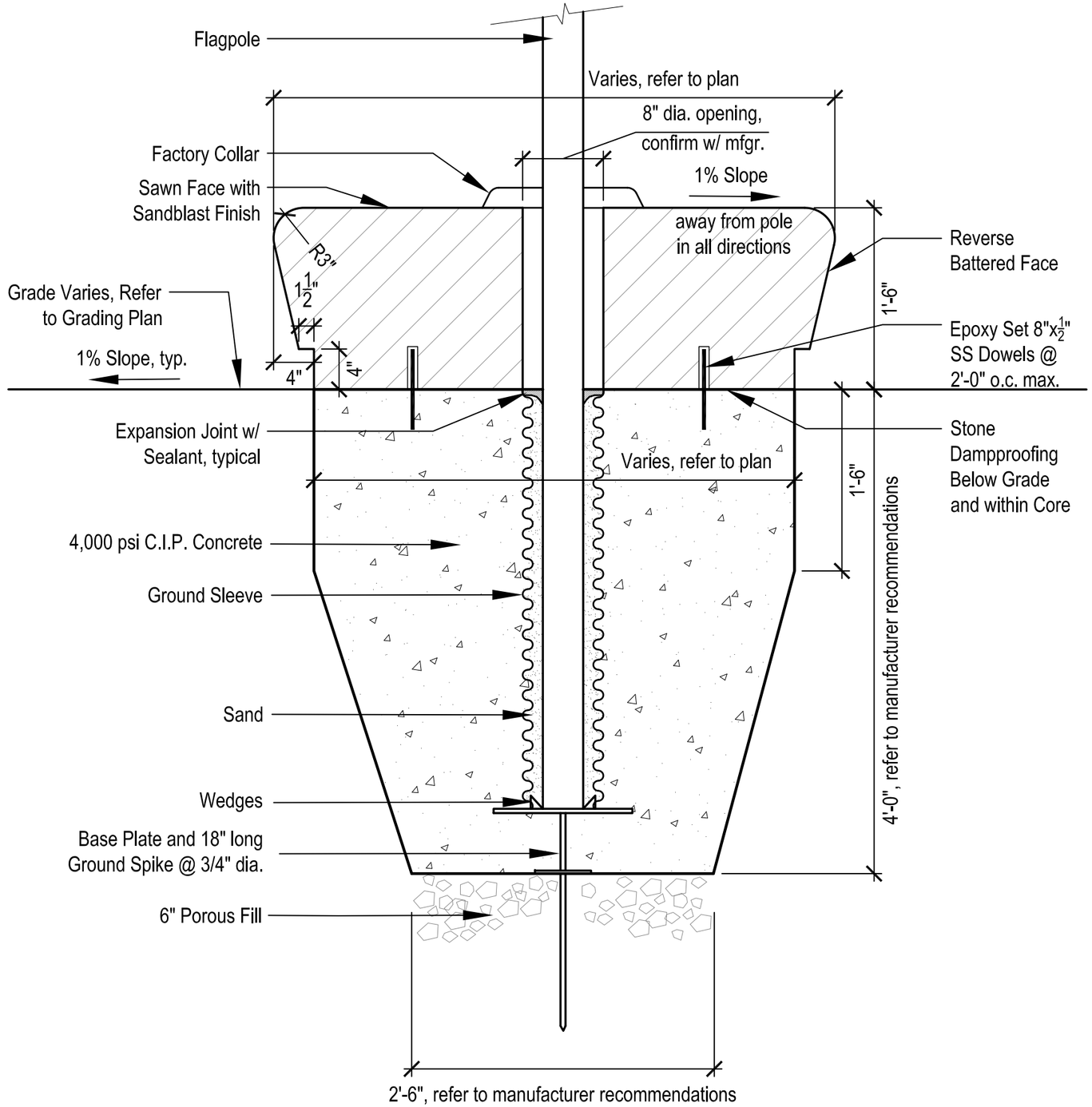

10 FLAGPOLE FOOTING AND STONE BASE

Scale: 1" = 1'-0"

1 February, 2012

MSKTD
& Associates, Inc.
ARCHITECTURE • ENGINEERING • INTERIOR DESIGN
1715 MAGNAVOX WAY
FORT WAYNE, IN 46804
voice 260.432.9337
930 NORTH MERIDIAN
INDIANAPOLIS, IN 46204
voice 317.917.1190
http://www.msktd.com

Indiana University
SouthEast Side Residence Hall
IU # 20106837
1801 East Jones Avenue
Bloomington, Indiana

DATE	2.1.2012
COMMISSION NUMBER	5804

D2.073

L6.2

Int

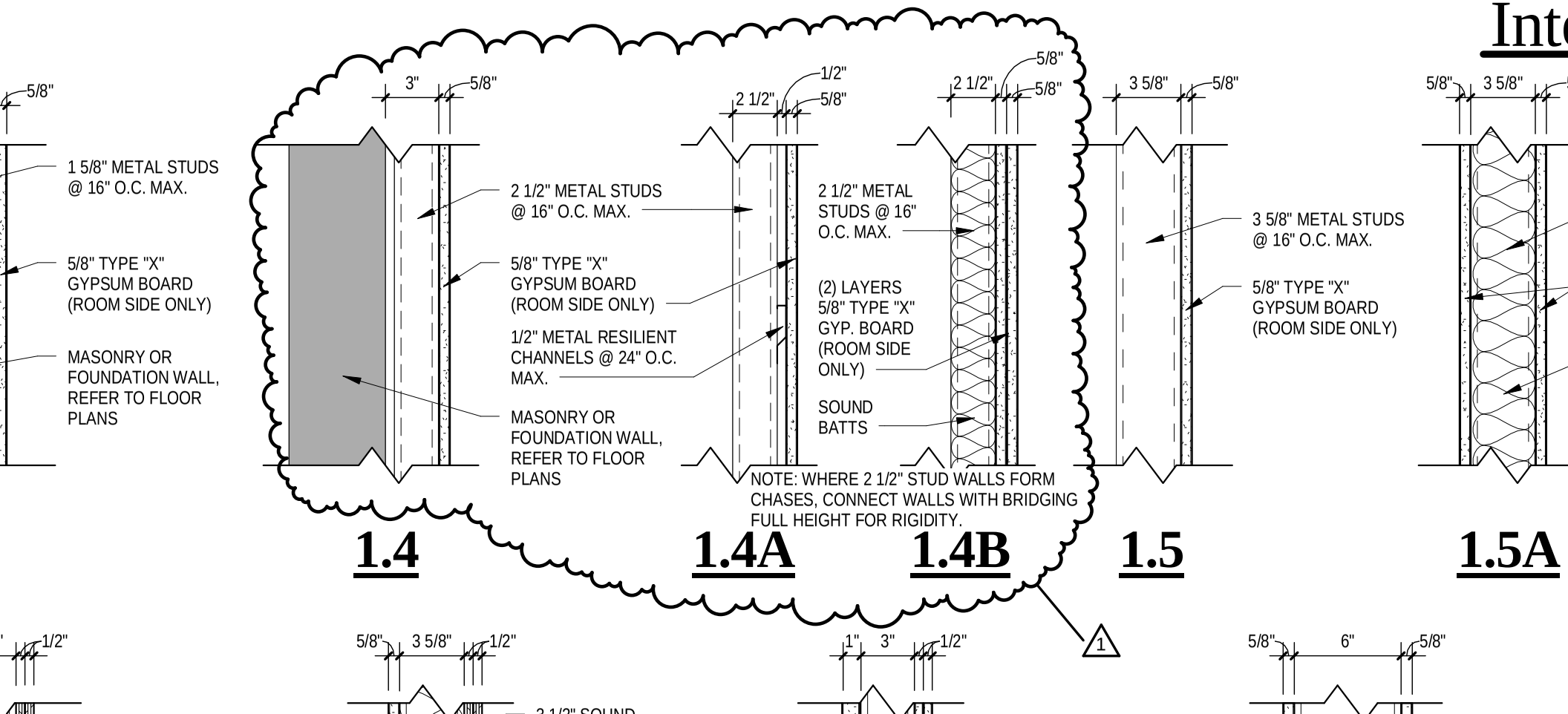
5/8"
1 5/8" METAL STUDS @ 16" O.C. MAX.
5/8" TYPE "X" GYPSUM BOARD (ROOM SIDE ONLY)
MASONRY OR FOUNDATION WALL, REFER TO FLOOR PLANS
3"
5/8"
2 1/2" METAL STUDS @ 16" O.C. MAX.
5/8" TYPE "X" GYPSUM BOARD (ROOM SIDE ONLY)
1/2" METAL RESILIENT CHANNELS @ 24" O.C. MAX.
MASONRY OR FOUNDATION WALL, REFER TO FLOOR PLANS
2 1/2"
1/2"
5/8"
2 1/2" METAL STUDS @ 16" O.C. MAX.
(2) LAYERS 5/8" TYPE "X" GYP. BOARD (ROOM SIDE ONLY)
SOUND BATTS
2 1/2"
5/8"
5/8"
NOTE: WHERE 2 1/2" STUD WALLS FORM CHASES, CONNECT WALLS WITH BRIDGING FULL HEIGHT FOR RIGIDITY.
3 5/8"
5/8"
3 5/8" METAL STUDS @ 16" O.C. MAX.
5/8" TYPE "X" GYPSUM BOARD (ROOM SIDE ONLY)
1.4
1.4A
1.4B
1.5
1.5A
1
1/2"
5/8"
3 5/8"
1/2"
1"
3"
1/2"
5/8"
6"
5/8"

D2.079

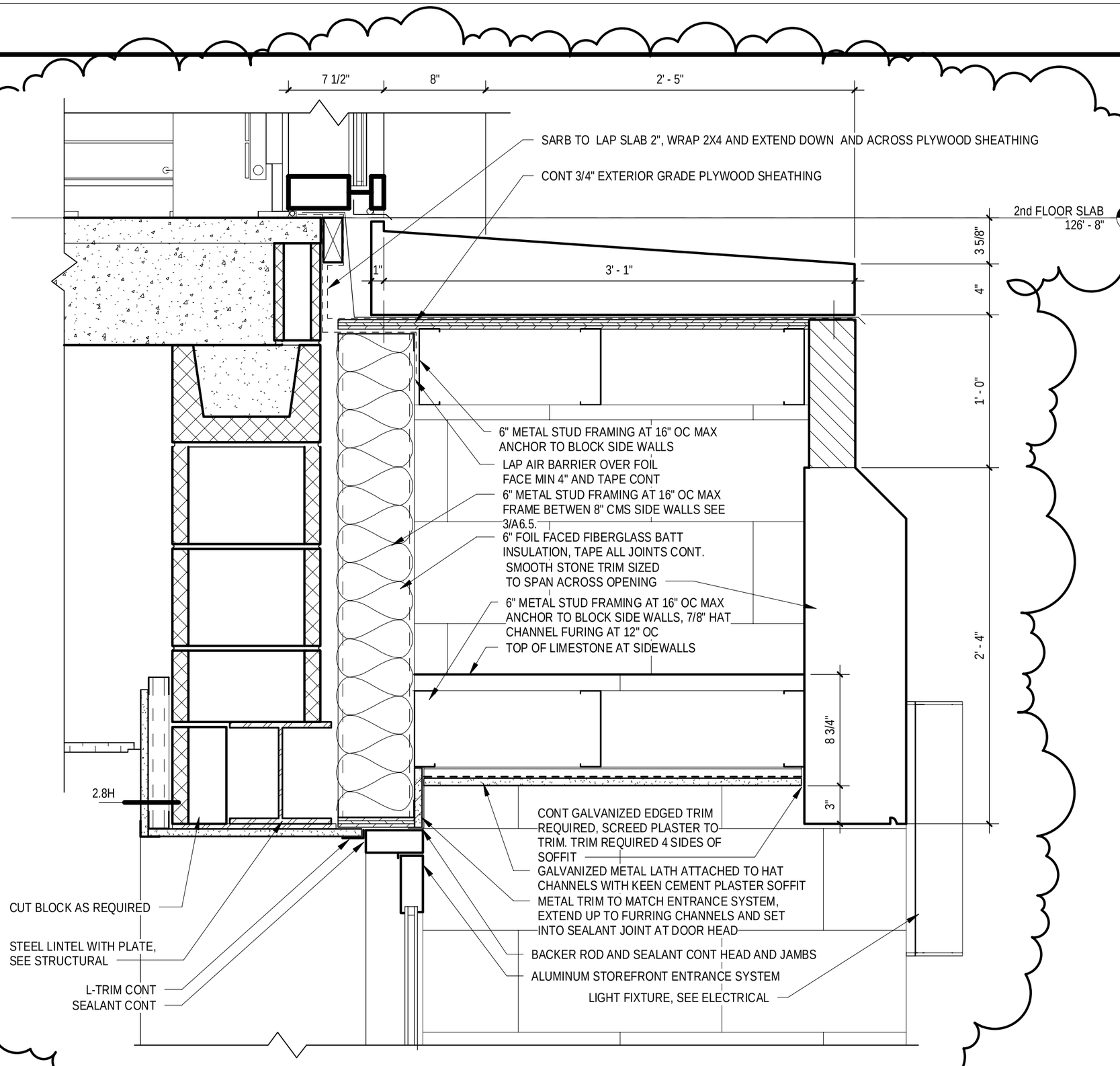

6 Head Detail

1 1/2" = 1'-0"

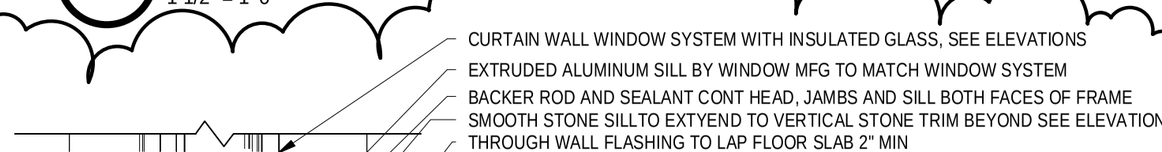

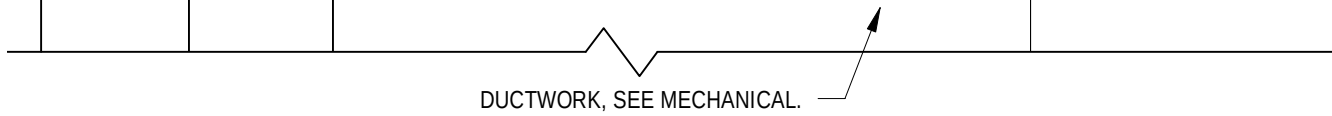

12 Areaway Detail

1 1/2" = 1'-0"

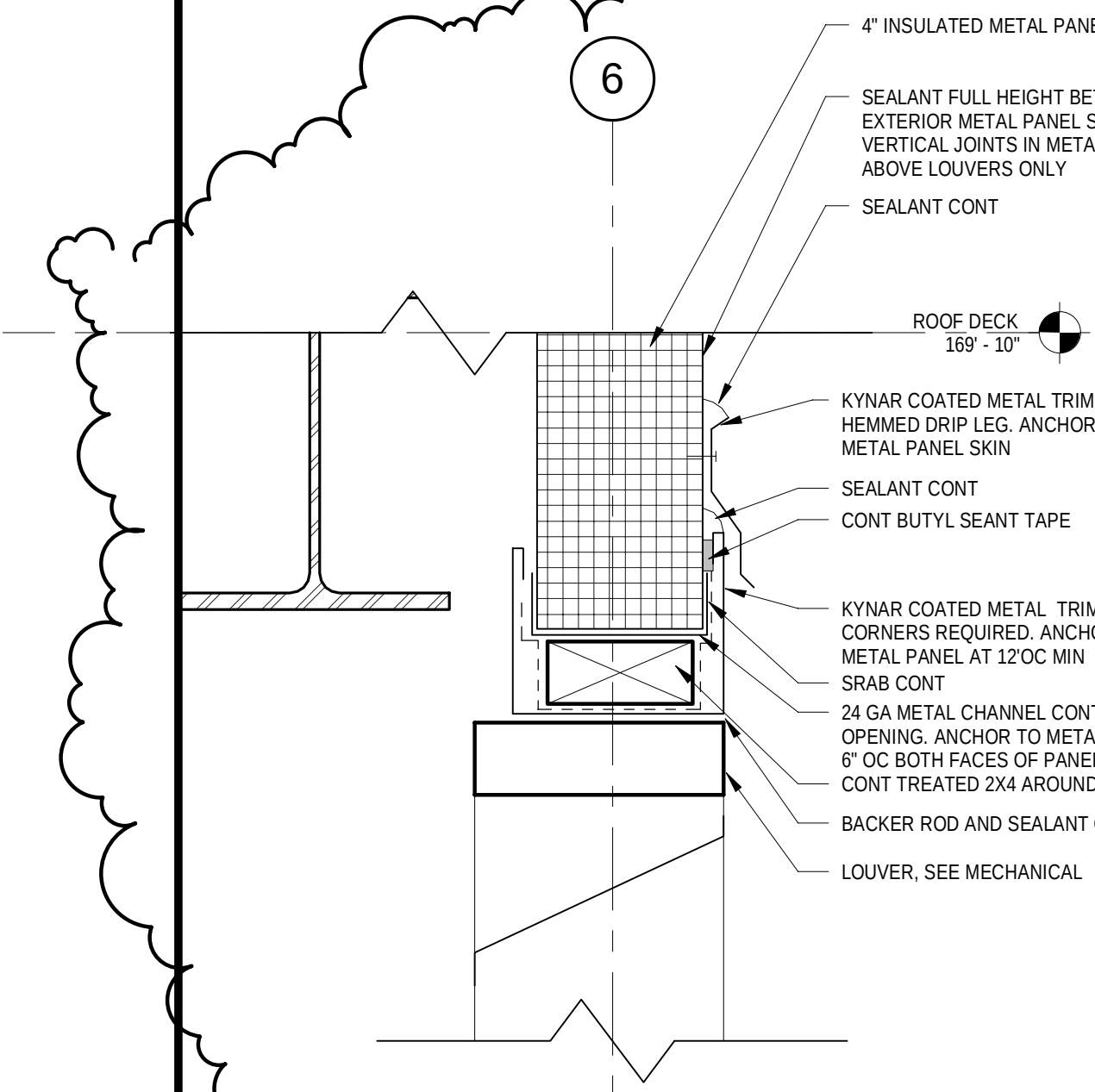

13 Penthouse Louver Detail

3" = 1'-0"

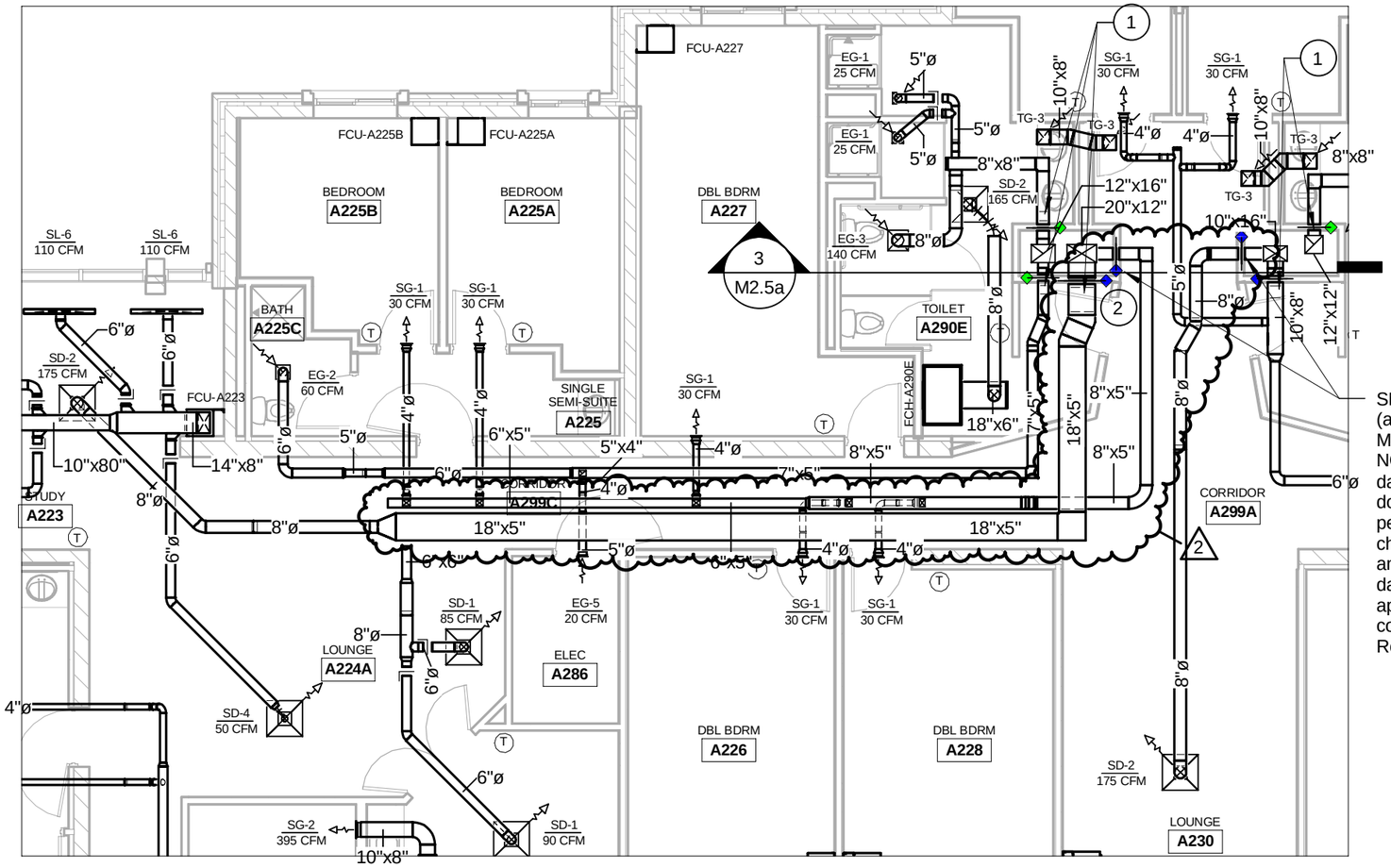

SMOKE/FIRE DAMPERS (apply SD-2 on Schedule Sheet M5.1)
NOTE: applies to only these two (2) dampers, Alt Bid M-7 only. Base bid doesn't have these chase penetrations. The other five (5) chase penetrations for Base Bid and Alt Bid M-7 are just fire dampers. Smoke/Fire dampers only apply to ventilation air supplied to corridors and common spaces, Residence floors.

Partial 2nd Floor HVAC - Unit A [Alt Bid M-7]

1/8" = 1'-0"

Reference Sheets M2.1a, M2.2a, M2.3a, M2.4a and M2.5a [ALTERNATE BID M-7 ONLY]
A. This Alternate Bid M-7 ductwork plan applies to all five levels (Ground - 4th Flr) in this example Unit A North wing.
B. The west wing of Unit A would be comparable to this drawing, with slight differences. Each floor would include the separate 8" duct penetration to each floor's Lounge (e.g., B213) with a smoke/fire damper. The separate duct from the other vertical duct and chase from Penthouse A588 would only be a 6x5 to the diffuser at the south end of the wing. That duct penetration of the shaft would require a smoke/fire damper. The supply duct that serves that same diffuser in the base bid would be reduced in this alternate as follows for floors 2, 3 and 4: 20x5 to 15x5; 18x5 to 14x5; 12x5 to 7x5; 10x5 to 6x5. The Ground and First Floors would have similar duct changes, with slightly different duct sizes, and also requiring smoke/fire damper as on the floors above.

Reference Sheets M2.3bc, M2.4bc and M2.5bc [ALTERNATE BID M-7 ONLY]
C. The north wing of Unit C would be changed in a similar manner (e.g., Lounge B233 would have separate penetration of duct chase with smoke/fire damper, and Study B223, Lounges B224A and B224B would have separate penetration of duct chase with a smoke/fire damper). This would apply to floors 2, 3 and 4.
D. Each floor of the south wing of Unit C would only include the separate 8" duct penetration to the Lounge (e.g., B213) with a smoke/fire damper. This would apply to floors 2, 3 and 4.

Revisions:	Date:	By:
2 ADDENDUM 2	2/01/12	EMK

MSKTD & Associates, Inc.
ARCHITECTURE ENGINEERING INTERIOR DESIGN
1715 MAGNAVOX WAY
FORT WAYNE, IN 46804
voice 260.432.9337
930 NORTH MERIDIAN
INDIANAPOLIS, IN 46204
voice 317.917.1190
http://www.msktd.com

Indiana University
Rose & Jones Residence Hall
IU # 20106837
1801 East Jones Avenue
Bloomington, Indiana

DATE 2/01/12
COMMISSION NUMBER 5804

D2.091

1/30/2012 3:50:27 PM

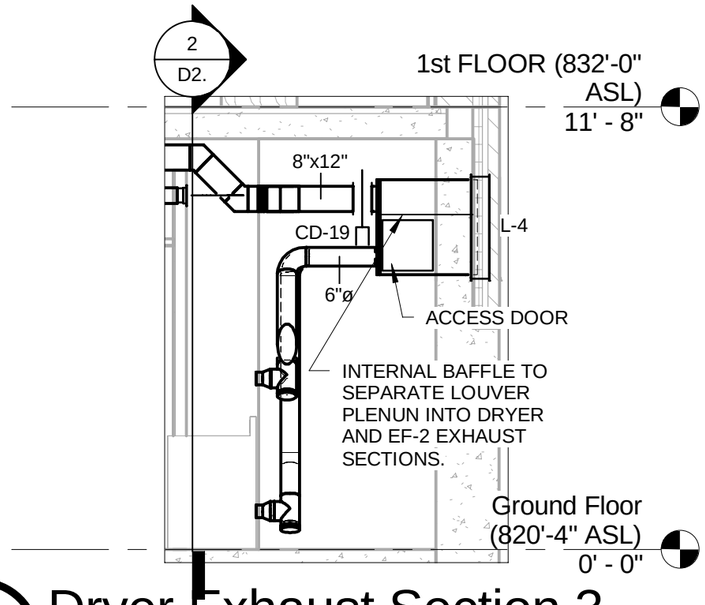

3 Dryer Exhaust Section 3

1/4" = 1'-0"

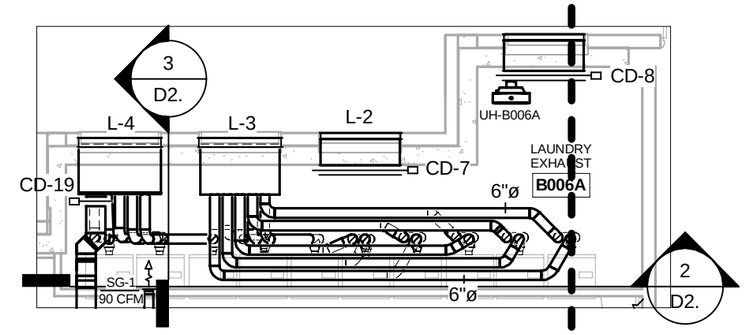

1 LAUNDRY EXHAUST B006A

1/8" = 1'-0"

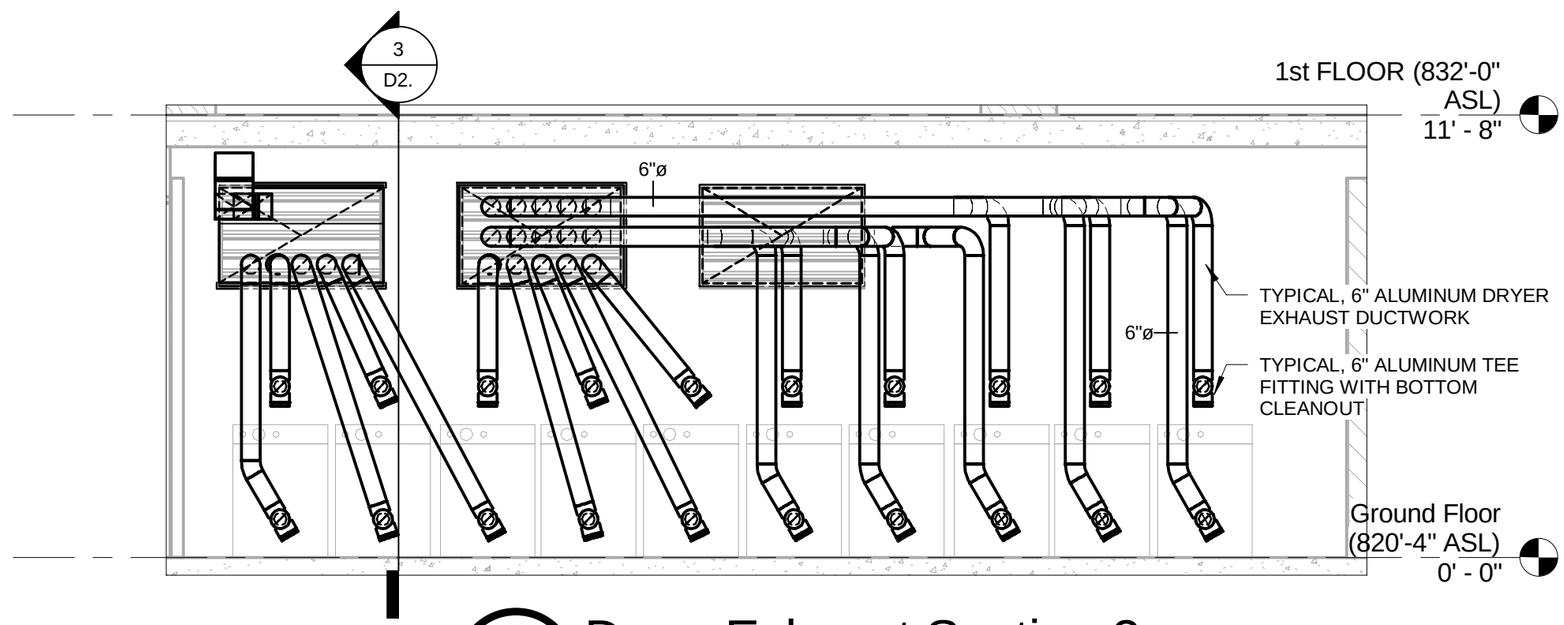

2 Dryer Exhaust Section 2

1/4" = 1'-0"

MSKTD & Associates, Inc.
ARCHITECTURE ENGINEERING INTERIOR DESIGN
1715 MAGNAVOX WAY
FORT WAYNE, IN 46804
voice 260.432.9337
930 NORTH MERIDIAN
INDIANAPOLIS, IN 46204
voice 317.917.1190
http://www.msktd.com

Indiana University
Rose & Jones Residence Hall
IU # 20106837
1801 East Jones Avenue
Bloomington, Indiana

DATE	2/01/12
COMMISSION NUMBER	5804

D2.092

1/31/2012 10:35:15 AM